उत्तराखण्ड ग्राम्य विकास समिति (UGVS)

Uttarakhand Gramya Vikas Samiti (UGVS)
Rural Enterprise Acceleration Project (REAP)

Invites

Request for Bids for

Procurement of Silage Bags under UGVS, REAP

National Competitive Bidding (NCB)

Ref No: 193/NCB/Goods/Silage Bags/REAP/2026

Issue date: 22nd June 2026

National Competitive Bidding
for
Procurement of Silage Bags under UGVS, REAP

Time schedule of Bid

Tender Reference No.	193/NCB/Goods/Silage Bags/REAP/2026
Date of Commencement of downloading of bid document	22.06.2026 from 3:00 PM
Pre-Bid Meeting	01.07.2026 at 12:00 Noon
Last date of seeking clarification (if any)	02.07.2026 till 3:00 PM
Bid Submission of Start Date	16.07.2026 from 3:00 PM
Last date and time of bid submission / uploading of bid on e-procurement portal	22.07.2026 up to 3:00 PM
Time and date of opening of Technical Bids	22.07.2026 at 3:30 PM
Time and date of opening of Financial Bids	To be intimated later
Place of opening of bids and address for communication	Office of the Project Director, Project Management Unit Rural Enterprise Acceleration Project, Uttarakhand Gramya VIkas Smiti, Aajeevika Bhawan, Tapowan Road, Dehradun - 248001, Uttarakhand

Table of Contents

Section I. Invitation for Bids 4

Section II. Instructions to Bidders 6

Section III. Bid Data Sheet (BDS) 28

Section IV. Bidding Forms 34

Section V. Schedule of Requirements 46

Section VI. Technical Specifications 47

Section VII. Contract 54

Section VII (A). General Conditions of Contract 56

Section VII (B). Special Conditions of Contract 72

Section VII (C). Contract Forms 78

Section VIII. Revised IFAD Policy on Preventing Fraud and Corruption in its Activities and Operations 85

Section I. Invitation for Bids

Dehradun, India

22nd May 2026

Re: ***193/NCB/Goods/Silage Bags/REAP/2026***

"Procurement of Silage Bags under UGVS, REAP"

1. The *Uttarakhand Gramya Vikas Samiti* has received financing from the International Fund for Agricultural Development (IFAD) and intends to apply a part of the proceeds of the financing to this purchase. The use of any IFAD financing shall be subject to IFAD's approval, pursuant to the terms and conditions of the financing agreement, as well as IFAD's rules, policies and procedures. IFAD and its officials, agents and employees shall be held harmless from and against all suits, proceedings, claims, demands, losses and liability of any kind or nature brought by any party in connection with *Rural Enterprise Acceleration Project (REAP).*

2. The *Rural Enterprise Acceleration Project is being implemented in all 13 districts of the Uttarakhand.* The goal of REAP is to contribute to the doubling of income of rural households and reduce distress migration. The development objective is to build resilience of rural households by diversifying their sources of income through intensified cluster based climate resilient production systems, promotion of farm and off-farm enterprises and creating a supportive ecosystem. The Project duration is seven years from 2022 to 2029. The project wishes to procure Silage Bags for household level silage making for different blocks of Uttarakhand State under the REAP Project.

3. This invitation for bids (IFB) follows the general procurement notice that appeared in in newspaper on 20.06.2024, and on the official website of UGVS ugvs.in.

4. The purchaser now invites bids from eligible entities (bidders) for the provision of procurement of Silage Bags under UGVS, REAP. More details on these goods and related services are provided in the schedule of requirements in this bidding document.

5. This IFB is open to all eligible bidders who wish to respond. Subject to restrictions noted in the bidding document, eligible entities may associate with other bidders to enhance their capacity to successfully carry out the procurement.

6. Bidding will be conducted using the **National Competitive Bidding (NCB)** method, the evaluation procedure for which is described in this bidding document, in accordance with the IFAD Procurement Handbook which is provided at www.ifad.org/project-procurement. The NCB process, as described, will include a review and verification of qualifications and past performance, including a reference check, prior to the contract award.

7. Please note that a pre-bid conference will be held as described in the bid data sheet (BDS), Section III of the bidding document.

8. Bidders must provide Bid Security as specified in the bid document and pay the bid processing fee as per requirement.

9. The bid document is available online and bids are to be submitted online through the e-procurement portal http://uktenders.gov.in only. Bids submitted in any other manner will not be accepted. Bidders are required to obtain Digital signature from designated firms and then register with the Government of Uttarakhand e-procurement platform and submit bids by using their user ID and Digital Signature.

10. Bids along with necessary enclosures must be uploaded to the website http://uktenders.gov.in as per bid schedule and first cover/envelope of the bids will be opened at the specified venue on the stipulated date and time, in the presence of the bidders or their authorized representatives who wish to attend. If the office happens to be closed on the date of pre-bid conference or opening of the bids as specified, the bids will be opened on the next working day at the same time and venue. **However, there will be no change in Bid submission date on e-portal, unless it is also extended.**

11. Bids must be submitted online through www.uktenders.gov.in no later than the date and time indicated in BDS.

12. Bidders shall be aware that late bids will not be accepted under any circumstance and will be returned unopened at the written request and cost of the bidder. All bids must be accompanied by a bid security or bid-securing declaration (as required) in the manner and amount specified in the bid data sheet.

13. Please note that electronic bids shall be accepted.

Yours sincerely,

Project Director,
Rural Enterprise Acceleration Project
Uttarakhand Gramya Vikas Samiti
Aajeevika Bhawan, Tapowan Road,
Dehradun - 248001, Uttarakhand

Section II. Instructions to Bidders

Table of Clauses

A. Introduction 8

1. Scope of Bid 8
2. Source of Funds 8
3. Prohibited Practices 8
4. Sexual Harassment, Sexual Exploitation and Abuse 11
5. Money laundering and Terrorist Financing 11
6. SECAP Performance Standards 12
7. Eligible Bidders and Conflict of Interest 12
8. Eligible Goods and Services 14
9. Cost of Bidding 15

B. The bidding documents 15

10. Content of Bidding Documents 15
11. Clarification of Bidding Documents 15
12. Amendment of Bidding Documents 16

C. Preparation and submission of bids 16

13. Language of Bid 16
14. Documents Constituting the Bid 16
15. Bid Form 17
16. Bid Prices 17
17. Currencies of Bid 18
18. Documents Establishing Bidder's Eligibility and Qualification 18
19. Documents Establishing Goods' Eligibility and Conformity to Bidding Documents 19
20. Bid Security 19
21. Bid Validity 20
22. Format and Signing of Bid 20

D. Submission of bids 21

23. Sealing and Marking of Bids 21
24. Deadline for Submission of Bids 21
25. Late Bids 21
26. Withdrawal of Bids 21

E. Opening and evaluation of bids 22

27. Opening of Bids by the Purchaser 22
28. Clarification of Bids 22
29. Preliminary Examination 23
30. Evaluation and Comparison of Bids 23
31. Abnormally Low Bids 24

32. Contacting the Purchaser 25

F. Award of contract 25

33. Post-Qualification 25
34. Award Criteria 25
35. Purchaser's Right to Vary Quantities at Time of Award 26
36. Purchaser's Right to Accept Any Bid and to Reject Any or All Bids 26
37. Notice of Intention to Award 26
38. Bid Protests 26
39. Notification of Award 26
40. Signing of Contract 27
41. Performance Security 27

Instructions to Bidders

A. Introduction

1. Scope of Bid

1.1 The purchaser has issued an invitation for bids for the procurement of goods and related services as specified in Section V. Schedule of Requirements. The name and identification number of the contract, and number and description of the lot(s), are specified in the bid data sheet (BDS).

1.2 The purchaser of the purchaser's country **identified in the BDS**, is not bound to accept any bid, and reserves the right to cancel the procurement at any time prior to contract award, without thereby incurring any liability to any bidder.

2. Source of Funds

2.1 The borrower or recipient (hereinafter called "the borrower") **specified in the BDS** has received (or in appropriate cases "has applied for") a financing from the International Fund for Agricultural Development ("the Fund") in various currencies equivalent to the amount **specified in the BDS** towards the cost of the project **named in the BDS**, and intends to apply a portion of the proceeds of this loan/grant to eligible payments under this contract. Payment by IFAD will be made only at the request of borrower and upon approval by IFAD, and will be subject, in all respects, to the terms and conditions of the financing agreement. The financing agreement prohibits a withdrawal from the loan and/or grant account for the purpose of any payment to persons or entities, or any payment prohibited by a decision of the United Nations Security Council taken under Chapter VII of the Charter of the United Nations.

3. Prohibited Practices

3.1 The Fund requires that all beneficiaries of IFAD funding, including the purchaser and any bidders, implementing partners, service providers, suppliers, sub-suppliers, contractors, sub-contractors, consultants, sub-consultants, and any of their agents (whether declared or not) and personnel observe the highest standards of ethics during the procurement and execution of such contracts, and comply with IFAD's Policy on Preventing Fraud and Corruption in its Activities and Operations, revised on 12 December 2018 and attached as Section VIII of this document (EB 2018/125/R.6, hereinafter "IFAD's Anti-Corruption Policy").

3.2 For the purposes of these provisions, and consistent with IFAD's Anticorruption Policy, the terms set forth below are defined as follows, and sometimes referred to collectively as "prohibited practices":

a) "*corrupt practice*" is the offering, giving, receiving, or soliciting, directly or indirectly, of anything of value in order to improperly influence the actions of another party;

b) "*fraudulent practice*" is any act or omission, including a misrepresentation, that knowingly or recklessly misleads, or attempts to mislead, a party in order to obtain a financial or other benefit or to avoid an obligation;

c) "*collusive practice*" is an arrangement between two or more parties designed to achieve an improper purpose, including improperly influencing the actions of another party;

d) "*coercive practice*" is impairing or harming, or threatening to impair or harm, directly or indirectly, any party or the property of any party, to improperly influence the actions of that or another party;

e) "*obstructive practice*" is (i) deliberately destroying, falsifying, altering or concealing evidence that may be material to an investigation by the Fund or making false statements to investigators in order to materially impede an investigation by the Fund; (ii) threatening, harassing or intimidating any party in order to prevent that party from disclosing its knowledge of matters relevant to an investigation by the Fund or from pursuing such an investigation; and/or (iii) the commission of any act intended to materially impede the exercise of the Fund's contractual rights of audit, inspection and access to information.

3.3 The Fund will deny approval of a proposed contract award if it determines that the firm or individual recommended for award, or any of its personnel or agents, or its sub-consultants, sub-contractors, service providers, suppliers, sub-suppliers and/or any of their personnel or agents, has, directly or indirectly, engaged in any of the prohibited practices in connection with an IFAD-financed and/or IFAD-managed activity or operation, including in competing for the contract.

3.4 In accordance with IFAD's Anticorruption Policy, the Fund has the right to sanction firms and individuals, including by declaring them ineligible, either indefinitely or for a stated period of time, to participate in any IFAD-financed and/or IFAD-managed activity or operation. This may include ineligibility to: (i) be awarded or otherwise benefit from any IFAD-financed contract, financially or in any other manner; (ii) be a nominated sub-contractor, consultant, manufacturer, supplier, sub-supplier, agent or service provider of an otherwise eligible firm being awarded an IFAD-financed contract; and (iii) receive the proceeds of any loan or grant

provided by the Fund.[1] The Fund also has the right to unilaterally recognize debarments by any of the International Financial Institutions that are members to the Agreement for Mutual Enforcement of Debarment Decisions if such debarments meet the requirements for mutual recognition under the Agreement for Mutual Enforcement of Debarment Decisions.

3.5 In addition, the Fund has the right to, at any time, declare a misprocurement and/or the ineligibility of any expenditures associated with a procurement process or contract if it determines that prohibited practices occurred in connection with this procurement process or contract and that the borrower/recipient has not taken timely and appropriate action, satisfactory to the Fund, to address such practices when they occur.

3.6 Bidders, suppliers, consultants, contractors, and their sub-contractors, sub-consultants, service providers, suppliers, agents and personnel, are required to fully cooperate with any investigation conducted by the Fund into possible prohibited practices, including by making personnel available for interviews and by providing full access to any and all accounts, premises, documents and records (including electronic records) relating to the relevant IFAD-financed and/or IFAD-managed operation or activity and to have such accounts, premises, records and documents audited and/or inspected[2] by auditors and/or investigators appointed by the Fund.

3.7 The bidder is obliged to disclose relevant prior sanctions and criminal convictions and any commissions or fees paid or are to be paid to any agents or other party in connection with this procurement process or the execution of the contract.

3.8 The bidder shall keep all records and documents, including electronic records, relating to this procurement process available for a minimum of three (3) years after notification of completion of the process or, in case the bidder is awarded the contract, execution of the contract.

[1] For the avoidance of doubt, a sanctioned party's ineligibility to be awarded a contract shall include, without limitation, (i) applying for pre-qualification, expressing interest in a consultancy, and bidding, either directly or as a nominated sub-contractor, nominated consultant, nominated manufacturer or supplier, or nominated service provider, in respect of such contract, and (ii) entering into an addendum or amendment introducing a material modification to any existing contract.

[2] Inspections include all fact-finding activities deemed relevant by the Fund to address allegations or other indications of possible prohibited practices. Such fact-finding activities may include, but are not limited to: accessing and examining a firm's or individual's financial records and information, and making copies thereof as relevant; accessing and examining any other documents, data or information (whether in hard copy or electronic format) deemed relevant for the investigation or audit, and making copies thereof as relevant; interviewing staff and other relevant individuals; performing physical inspections and site visits; and obtaining third party verifications of information. It is the responsibility of the firm or individual under inspection to ensure effective compliance with their duty to cooperate vis-à-vis any potential local laws or regulations or other potentially conflicting obligations.

4. Sexual Harassment, Sexual Exploitation and Abuse

4.1 The Fund requires that all beneficiaries of IFAD Funding, including the purchaser and any bidders, implementing partners, service providers, suppliers, sub-suppliers, contractors, sub-contractors, consultants, sub-consultants, and any of their agents (whether declared or not) and personnel comply with IFAD's Policy on Preventing and Responding to Sexual Harassment, Sexual Exploitation and Abuse. For the purpose of this provision, and consistent with IFAD's Policy on Preventing and Responding to Sexual Harassment, Sexual Exploitation and Abuse as it may be amended from time to time, the terms set forth below are defined as follows:

a) Sexual harassment means "any unwelcome sexual advance, request for sexual favour or other verbal, non-verbal or physical conduct of a sexual nature that unreasonably interferes with work, alters or is made a condition of employment, or creates an intimidating, hostile or offensive work environment.

b) Sexual exploitation and abuse means any actual or attempted abuse of a position of vulnerability, differential power, or trust, for sexual purposes, including, but not limited to, profiting monetarily, socially or politically from the sexual exploitation of others (sexual exploitation); the actual or threatened physical intrusion of a sexual nature, whether by force or under unequal or coercive conditions (sexual abuse).

4.2 Purchasers, suppliers and bidders shall take all appropriate measures to prevent and prohibit sexual harassment and sexual exploitation and abuse on the part of their personnel and subcontractors or anyone else directly or indirectly employed by them or any of subcontractors in the performance of the contract. Purchasers, suppliers and bidders shall immediately report to the purchaser or IFAD any incidents of sexual harassment and sexual exploitation and abuse arising out of or in connection with the performance of the contract or prior to its execution, including convictions, disciplinary measures, sanctions or investigations. The purchaser may take appropriate measures, including the termination of the contract, on the basis of proven acts of sexual harassment, sexual exploitation and abuse arising out of or in connection with the performance of the contract.

4.3 The bidder or supplier is required to disclose any relevant prior sanctions, convictions, disciplinary measures or criminal records.

5. Money laundering and Terrorist Financing

5.1 The Fund requires that all beneficiaries of IFAD funding or funds administered by IFAD, including the purchaser, any bidders, implementing partners, service providers and suppliers, observe the highest standards of integrity during the procurement and execution of such contracts, and commit to combat money laundering and terrorism financing consistent

with IFAD's Anti-Money Laundering and Countering the Financing of Terrorism Policy.

6. SECAP Performance Standards

6.1 The resulting contract will be implemented in a manner consistent with IFAD's Social, Environmental and Climate Assessment Procedures (SECAP), available on https://www.ifad.org/en/secap.

7. Eligible Bidders and Conflict of Interest

7.1 This invitation for bids is open to all suppliers from eligible source countries except as provided hereinafter.

7.2 Any eligible entity may bid independently or in a joint venture (JV). In the case where a bidder is or proposes to be a JV

a) all members shall be jointly and severally liable for the execution of the contract; and

b) the JV shall nominate a representative who will have the authority to conduct all business for and on behalf of any and all the members of the JV.

Conflict of Interest

7.3 A bidder shall not have any actual, potential or reasonably perceived conflict of interest. A bidder shall declare in the bid submission form any actual, potential or reasonably perceived interest, regardless of its nature, that affects, may affect, or might reasonably be perceived by others to affect, impartiality in any matter relevant to the procurement process, including the selection process and the execution of the contract. A bidder with an actual, potential or reasonably perceived conflict of interest shall be disqualified, unless otherwise explicitly approved by the Fund. The purchaser requires that the bidder and the supplier hold the project's interests as paramount at all times, strictly avoiding any actual, potential or reasonably perceived conflicts of interest, including actual, potential or reasonably perceived conflicts with other assignments or their own personal and/or corporate interests, and act without any consideration for any other ongoing or future work. Without limitation on the generality of the foregoing, a bidder or supplier, including all parties constituting the bidder or supplier and their respective personnel and affiliates, as well as any subcontractors for any part of the contract, including related services, and their respective personnel and affiliates, may be considered to have an actual, potential or reasonably perceived conflict of interest and disqualified or terminated if they:

a) have, may have or might reasonably appear to have at least one controlling partner in common with one or more other parties in the process contemplated by this bidding document or the execution of the contract; or

b) have, may have or might reasonably appear to have the same legal representative as another bidder for purposes of this bid or execution of the contract; or

c) have, may have or might reasonably appear to have a relationship, directly or through common third parties, that puts them in a position to have access to undue or undisclosed information about or influence over the bid process and the execution of the contract, or influence the decisions of the purchaser regarding the selection process for this procurement or during the execution of the contract; or

d) participate, may participate or might reasonably appear to participate in more than one bid in this process; participation by a bidder in more than one bid shall result in the disqualification of all bids in which the party is involved; however, this provision does not limit the inclusion of the same subcontractor in more than one bid; or

e) are themselves, may be or might reasonably appear to be, or have, may have or might reasonably appear to have a business or family relationship with, a member of the purchaser's board of directors or its personnel, the Fund or its personnel, or any other individual was, has been or might reasonably be directly or indirectly involved in any part of (i) the preparation of this bidding document, (ii) the selection process for this procurement, or (iii) execution of the contract, unless the actual, potential or reasonably-perceived conflict stemming from this relationship has been explicitly authorized by the Fund.

7.4 A bidder that has been engaged by the purchaser to provide goods, works or services for a project, its personnel and any of its affiliates, shall be disqualified from providing consulting services related to those goods, works or services. Conversely, a bidder hired to provide consulting services for the preparation or implementation of a project, its personnel and any of its affiliates, shall be disqualified from subsequently providing goods, works or non-consulting services resulting from or directly related to such consulting services for such preparation or implementation.

7.5 A bidder and the supplier shall have an obligation to disclose any situation of actual, potential or perceived conflict of interest that impacts, may impact, or might reasonably appear to be perceived by others to impact, their capacity to serve the best interest of the purchaser. Failure to properly disclose any of said situations may lead to appropriate actions, including the disqualification of the bidder, the termination of the Contract and any other as appropriate under the IFAD Policy on Preventing Fraud and Corruption in its Projects and Operations.

7.6 A bidder or supplier, all parties constituting the bidder or supplier, and any subcontractors for any part of the Contract, including related services, and their respective personnel and affiliates, will not be any person or entity under a declaration of ineligibility by the Fund for having engaged in prohibited practices as contemplated by ITB clause 3 above. The Fund also has the right to unilaterally recognize debarments by any of the International Financial Institutions that are members to the Agreement for Mutual Enforcement of Debarment Decisions if such debarments meet the requirements for mutual recognition under the Agreement for Mutual Enforcement of Debarment Decisions.

7.7 A bidder or supplier, all parties constituting the bidder or supplier, and any subcontractors for any part of the contract, including related services, and their respective personnel and affiliates not otherwise made ineligible for a reason described in this ITB Clause 7 will nonetheless be excluded if:

a) as a matter of law or official regulation, the Government prohibits commercial relations with the country of the bidder or Supplier (including any Associates, Subcontractors and any respective affiliates) provided that the Fund is satisfied that such exclusion does not preclude effective competition for the supply of goods or the contracting of works or services required; or

b) by an act of compliance with a decision of the United Nations Security Council taken under Chapter VII of the Charter of the United Nations, the Government prohibits the issuance of a payment.

8. Eligible Goods and Services

8.1 All goods and related services to be supplied under the contract shall have their origin in eligible source countries.

8.2 For purposes of this clause, “origin” means the place where the goods are mined, grown, or produced, or the place from which the related services are supplied. Goods are produced when, through manufacturing, processing, or substantial and major assembly of components, a commercially-recognised product results that is substantially different in basic characteristics or in purpose or utility from its components.

8.3 The origin of goods and services is distinct from the nationality of the bidder.

9. Cost of Bidding

9.1 The bidder shall bear all costs associated with the preparation and submission of its bid, and the purchaser will in no case be responsible or liable for those costs, regardless of the conduct or outcome of the bidding process.

B. The bidding documents

10. Content of Bidding Documents

10.1 The goods required, bidding procedures, and contract terms are prescribed in the bidding documents. In addition to the invitation for bids, the bidding documents include:

a) instructions to bidders (ITB)

b) bid data sheet (BDS)

c) schedule of requirements

d) bidding forms

e) technical specifications

f) general conditions of contract (GCC)

g) special conditions of contract (SCC)

h) contract forms

10.2 The bidder is expected to examine all instructions, forms, terms, and specifications in the bidding documents. Failure to provide all information required by the bidding documents or to submit a bid that is not substantially responsive to the bidding documents in every respect will be at the bidder's risk and may result in the rejection of its bid.

11. Clarification of Bidding Documents

11.1 A prospective bidder requiring any clarification of this bidding document shall contact the purchaser in writing, by email or fax at the purchaser's address **indicated in the BDS**. The purchaser will respond to any request for clarification, provided that such a request is received no later than the date and time **indicated in the BDS**. The purchaser shall send written copies of the responses, including a description of the inquiry but without identifying its source, to bidders who have registered or obtained the bidding document directly from the purchaser by the date **specified in the BDS**. Should the clarification result in changes to the essential elements of this bidding document, the purchaser shall amend this bidding document following the procedure under ITB Clause 12.

11.2 The bidder's designated representative is invited to attend a pre-bid conference, **if provided for in the BDS**. The purpose of the conference will be to clarify the issues and to answer questions on any matter that may be raised at that stage.

11.3 Minutes of the pre-bid conference, including the text of the questions and answers related to the conference, without identifying the source, shall be transmitted in writing to all bidders who have registered or obtained the bidding document directly from the purchaser. Any modification to this bidding document that may become necessary as a result of the pre-bid conference shall be made by the purchaser exclusively through the issue of an addendum and not through the minutes of the pre-bid conference.

12. Amendment of Bidding Documents

12.1 At any time prior to the deadline for submission of bids, the purchaser may amend this bidding document by issuing addenda.

12.2 All addenda issued shall be part of this bidding document and shall be communicated in writing to all bidders that have registered or obtained the bidding document directly from the purchaser.

12.3 To give prospective bidders reasonable time in which to take an addendum into account in preparing their bids, the purchaser may extend the deadline for the submission of bids at its sole discretion.

C. Preparation and submission of bids

13. Language of Bid

13.1 The bid prepared by the bidder, as well as all correspondence and documents relating to the bid exchanged by the bidder and the purchaser, shall be written in the language specified **in the BDS**. Supporting documents and printed literature furnished by the bidder may be in another language provided they are accompanied by an accurate translation of the relevant passages into English, in which case, for purposes of interpretation of the bid, the translation shall govern.

14. Documents Constituting the Bid

14.1 The bid prepared by the bidder shall comprise the following components:

a) a bid form and a price schedule completed in accordance with ITB clauses 15, 16, and 17;

b) documentary evidence established in accordance with ITB clause 18 that the bidder is eligible to bid and is qualified to perform the contract if its bid is accepted;

c) documentary evidence established in accordance with ITB clause 19 that the goods and ancillary services to be supplied by the bidder are eligible goods and services and conform to the bidding documents; and

d) bid security or bid-securing declaration furnished in accordance with ITB clause 20.

15. Bid Form

15.1 The bidder shall complete, sign and stamp the bid form and the appropriate price schedule furnished in the bidding documents, indicating the goods to be supplied, a brief description of the goods, their country of origin, quantity, and prices.

16. Bid Prices

16.1 The bidder shall indicate on the appropriate price schedule the unit prices (where applicable) and total bid price of the goods it proposes to supply under the contract.

16.2 Prices indicated on the price schedule shall be entered separately in the following manner:

a) For goods offered from within the purchaser's country:

(i) the price of the goods quoted EXW (ex works, ex factory, ex warehouse, ex showroom, or off-the-shelf, as applicable), including all customs duties and sales and other taxes already paid or payable:

(A) on the components and raw material used in the manufacture or assembly of goods quoted ex works or ex factory;

or

(B) on the previously imported goods of foreign origin quoted ex warehouse, ex showroom, or off-the-shelf.

(ii) the price for inland transportation, insurance and other costs incidental to delivery of the goods to their final destination, if specified **in the BDS**.

b) For goods offered from abroad:

(i) the price of the goods shall be quoted CIF named port of destination, or CIP border point, or CIP named place of destination in the purchaser's country, as specified **in the BDS**. In quoting the price, the bidder shall be free to use transportation through carriers registered in any eligible countries. similarly, the bidder may obtain insurance services from any eligible source country.

(ii) the price for inland transportation, insurance and other costs incidental to delivery of the goods from the port of entry to their final destination, if specified **on the BDS**.

16.3 The terms EXW, CIF, CIP, etc., shall be governed by the rules prescribed in the current edition of Incoterms published by the International Chamber of Commerce, Paris.

16.4 The bidder's separation of price components in accordance with ITB clause 16.2 above will be solely for the purpose of facilitating the comparison of bids by the purchaser and will not in any way limit the purchaser's right to contract on any of the terms offered.

16.5 Prices quoted by the bidder shall be fixed during the bidder's performance of the contract and not subject to variation on any account, unless otherwise specified **in the BDS**.

16.6 If bids are invited for individual contracts (lots) or for any combination of contracts (packages), bidders wishing to offer any price reduction for the award of more than one contract (lot), shall specify in its bid the price reductions applicable to each package, or alternatively, to individual contracts within the package.

17. Currencies of Bid

17.1 The currency(ies) of the bid shall be specified **in the BDS**. For evaluation and comparison purposes, the currency(ies) of the bids shall be converted into a single currency as specified **in the BDS**.

18. Documents Establishing Bidder's Eligibility and Qualification

18.1 Pursuant to ITB clause 18, the bidder shall furnish, as part of its bid, documents establishing the bidder's eligibility to bid and its qualifications to perform the contract if its bid is accepted.

18.2 The documentary evidence of the bidder's eligibility to bid shall establish to the purchaser's satisfaction that the bidder, at the time of submission of its bid, is from an eligible country as defined **in the BDS**.

18.3 The documentary evidence of the bidder's qualifications to perform the contract if its bid is accepted shall establish to the purchaser's satisfaction:

a) that, in the case of a bidder offering to supply goods under the contract which the bidder did not manufacture or otherwise produce, the bidder has been duly authorised by the goods' manufacturer or producer to supply the goods in the purchaser's country unless otherwise specified **in the BDS**;

b) that the bidder has the financial, technical, and production /after sales service capability necessary to perform the contract as stipulated in the **BDS**;

c) that, in the case of a bidder not doing business within the purchaser's country, the bidder is or will be (if awarded the contract) represented by an agent in the purchaser's country

equipped and able to carry out the supplier's maintenance, repair, and spare parts-stocking obligations prescribed in the conditions of contract and/or technical specifications; and

d) that the bidder meets the qualification criteria listed **in the BDS**.

19. Documents Establishing Goods' Eligibility and Conformity to Bidding Documents

19.1 The documentary evidence of conformity of the goods and services to the bidding documents may be in the form of literature, drawings, and data, and shall consist of:

a) a detailed description of the essential technical and performance characteristics of the goods;

b) a list giving full particulars, including available sources and current prices of spare parts, special tools, etc., necessary for the proper and continuing functioning of the goods for a period to be specified **in the BDS**, following commencement of the use of the goods by the purchaser; and

c) an item-by-item commentary on the purchaser's technical specifications demonstrating substantial responsiveness of the goods and services to those specifications, or a statement of deviations and exceptions to the provisions of the technical specifications.

19.2 For purposes of the commentary to be furnished pursuant to ITB clause 19.1(c) above, the bidder shall note that standards for workmanship, material, and equipment, as well as references to brand names or catalogue numbers designated by the purchaser in its technical specifications, are intended to be descriptive only and not restrictive. The bidder may substitute alternative standards, brand names, and/or catalogue numbers in its bid, provided that it demonstrates to the purchaser's satisfaction that the substitutions ensure substantial equivalence to those designated in the technical specifications.

20. Bid Security

20.1 The bidder shall furnish, as part of its bid, either a bid security or a bid-securing declaration, as specified **in the BDS**.

20.2 If a bid security is required, it shall be in the amount and currency specified **in the BDS**, and shall be in one of the following forms:

a) a bank guarantee or an irrevocable letter of credit issued by a reputable bank located in the purchaser's country or abroad, in the form provided in the bidding documents or another form acceptable to the purchaser and valid for thirty (30) days beyond the validity of the bid; or

b) a cashier's or certified cheque.

20.3 Any bid not secured in accordance with this ITB clause 20 will be rejected by the purchaser as non-responsive, pursuant to ITB clause 29.

20.4 Upon receipt of the signed contract agreement and a valid performance security, the purchaser shall return the bid securities of unsuccessful bidders.

20.5 The successful bidder's bid security will be discharged upon the bidder signing the contract, pursuant to ITB clause 40, and furnishing the performance security, pursuant to ITB clause 41.

20.6 The bid security may be forfeited:

a) if a bidder:

(i) withdraws its bid during the period of bid validity specified by the bidder on the bid form, or

(ii) does not accept the correction of errors pursuant to ITB clause 29.2; or

b) in the case of a successful bidder, if the bidder fails:

(i) to sign the contract in accordance with ITB clause 40; or

(ii) to furnish performance security in accordance with ITB clause 41.

21. Bid Validity

21.1 Bids shall remain valid for the period specified **in the BDS** after the date of bid submission prescribed by the purchaser, pursuant to ITB clause 24. A bid valid for a shorter period shall be rejected by the purchaser as non-responsive.

21.2 In exceptional circumstances, the purchaser may solicit the bidder's consent to an extension of the period of validity. The request and the responses thereto shall be made in writing. The bid security provided under ITB clause 20 shall also be suitably extended. A bidder may refuse the request without forfeiting its bid security. A bidder granting the request will not be required nor permitted to modify its bid. The request shall be made during the original period of validity.

22. Format and Signing of Bid

22.1 The bidder shall prepare an original and the number of copies of the bid indicated **in the BDS**, clearly marking each "ORIGINAL BID" and "COPY OF BID", as appropriate. In the event of any discrepancy between them, the original shall govern.

22.2 The original and the copies of the bid shall be typed or written in indelible ink and shall be signed by the bidder or a person or persons duly authorised to bind the bidder to the contract. All pages of the bid, except for unamended printed literature, shall be initialed by the person or persons signing the bid.

22.3 Any interlineations, erasures or overwriting shall be valid only if they are initialed by the person or persons signing the bid.

22.4 The bidder shall furnish information as described in the form or bid on commissions or gratuities, if any, paid or to be paid to agents relating to this bid, and to contract execution if the bidder is awarded the contract.

D. Submission of bids

23. Sealing and Marking of Bids

23.1 The bidder shall seal the original and each copy of the bid, in separate envelopes, duly marking the envelopes as "ORIGINAL" and "COPY". The envelopes shall then be enclosed in an outer envelope and sealed.

23.2 The inner and outer envelopes shall:

a) indicate the name and address of the bidder to enable the bid to be returned unopened in case it is declared "late";

b) be addressed to the purchaser at the address given **in the BDS**; and

c) bear the project name indicated **in the BDS**, the invitation for bids title and Procurement Number indicated **in the BDS**, and a statement: "DO NOT OPEN BEFORE," to be completed with the time and the date specified **in the BDS**.

23.3 If the outer envelope is not sealed and marked as required by ITB Clause 23.2, the purchaser will assume no responsibility for the bid's misplacement or premature opening.

24. Deadline for Submission of Bids

24.1 Bids must be received at the address indicated in ITB 23.2(b) and by the time and date specified **in the BDS**.

25. Late Bids

25.1 Any bid received by the purchaser after the deadline for submission of bids prescribed by the purchaser pursuant to ITB clause 24 will be rejected and returned unopened to the bidder.

26. Withdrawal of Bids

26.1 The bidder may withdraw its bid after the bid's submission, provided that written notice is received by the purchaser prior to the deadline prescribed for submission of bids.

26.2 The bidder's withdrawal notice shall be prepared, sealed, marked, and dispatched in accordance with the provisions of ITB clause 23 but in addition the envelopes shall be clearly marked "WITHDRAWAL". A withdrawal notice may also be sent by fax or email, but followed a signed confirmation copy, postmarked not later than the deadline for submission of bids.

26.3 No bid may be withdrawn in the interval between the deadline for submission of bids and the expiration of the period of bid validity specified by the bidder on the bid form. Withdrawal of a bid during this interval may result in the bidder's forfeiture of its bid security, pursuant to ITB clause 20.

E. Opening and evaluation of bids

27. Opening of Bids by the Purchaser

27.1 The purchaser will open all bids in the presence of bidders' representatives who choose to attend, at the time, on the date, and at the place specified **in the BDS**. The bidders' representatives who are present shall sign a register evidencing their attendance.

27.2 The bidders' names, withdrawals, bid prices, discounts, and the presence or absence of the requisite bid security and such other details as the purchaser, at its discretion, may consider appropriate, will be announced at the opening. No bid shall be rejected at bid opening, except for late bids, which shall be returned unopened to the bidder pursuant to ITB clause 25.

27.3 Bids that are not opened and read out at bid opening shall not be considered further for evaluation, irrespective of the circumstances.

27.4 The purchaser will prepare minutes of the bid opening and a copy of which is to be sent promptly to the participating bidders and IFAD.

28. Clarification of Bids

28.1 During evaluation of the bids, the purchaser may, at its discretion, ask the bidder for a clarification of its bid. The request for clarification and the response shall be in writing, and no change in the prices or substance of the bid shall be sought, offered, or permitted.

29. Preliminary Examination

29.1 The purchaser will examine the bids to determine whether they are complete, whether any computational errors have been made, whether required sureties have been furnished, whether the documents have been properly signed, and whether the bids are generally in order.

29.2 Arithmetical errors will be rectified on the following basis. If there is a discrepancy between the unit price and the total price that is obtained by multiplying the unit price and quantity, the unit price shall prevail, and the total price shall be corrected, unless there is an obvious discrepancy in placement of the decimal point. If there is a discrepancy between words and figures, the amount in words will prevail unless the words do not reflect the correct value of the sum of the items' respective value. If the bidder does not accept the correction of the errors, its bid shall be rejected, and its bid security may be forfeited.

29.3 The purchaser may waive any minor informality, nonconformity, or irregularity in a bid which does not constitute a material deviation, provided such waiver does not prejudice or affect the relative ranking of any bidder.

29.4 Prior to the detailed evaluation, pursuant to ITB clause 30, the purchaser will determine the substantial responsiveness of each bid to the bidding documents. For purposes of these clauses, a substantially responsive bid is one that conforms to all the terms and conditions of the bidding documents without material deviations. Deviations from, or objections or reservations to critical provisions, such as those concerning bid security (ITB clause 20), applicable law (GCC clause 34), and taxes and duties (GCC clause 36), will be deemed to be a material deviation. The purchaser's determination of a bid's responsiveness is to be based on the contents of the bid itself without recourse to extrinsic evidence.

29.5 If a bid is not substantially responsive, it will be rejected by the purchaser and may not subsequently be made responsive by the bidder by correction of the nonconformity.

30. Evaluation and Comparison of Bids

30.1 The purchaser will evaluate and compare the bids which have been determined to be substantially responsive, pursuant to ITB clause 29.

30.2 The purchaser's evaluation of a bid will exclude and not take into account:

a) in the case of goods manufactured in the purchaser's country or goods of foreign origin already located in the purchaser's country, sales and other similar taxes, which will be payable on the goods if a contract is awarded to the bidder;

b) in the case of goods of foreign origin offered from abroad, customs duties and other similar import taxes which will be payable on the goods if the contract is awarded to the bidder; and

30.3 The purchaser shall then apply the bid evaluation criteria, if any, as indicated in the BDS and thereafter compare the evaluated prices of all substantially responsive bids established in accordance with ITB 30.2, ITB 17 and ITB 29.2 to determine the bid with the "best value for money". The comparison shall be on the basis of CIP (place of final destination) prices for imported goods and EXW prices after applying the aforementioned stipulated bid evaluation criteria, plus cost of inland transportation and insurance to place of destination, for goods manufactured within the borrower's country, together with prices for any required installation, training, commissioning and other services. The evaluation of prices shall not take into account custom duties and other taxes levied on imported goods quoted CIP and sales and similar taxes levied in connection with the sale or delivery of goods.

30.4 Bids shall be evaluated on item-by-item basis if so indicated in the **BDS**. Otherwise, if bids are being invited for individual lots (contracts) or for any combination of lots (packages) then the bid evaluation shall be on lot-by-lot basis. Unless otherwise **specified in the BDS,** prices quoted shall correspond to 100 % of the items specified for each lot and to 100% of the quantities specified for each item of a lot. Bidders wishing to offer discounts for the award of more than one Contract (lot) shall specify in their bid the price reductions applicable to each package, or alternatively, to individual Contracts within the package. Discounts shall be submitted in accordance with ITB 16.6 provided the bids for all lots (contracts) are opened at the same time. The purchaser, after calculating the impact of the offered discounts by the various bidders, shall determine the combination of contract awards that will result in the lowest overall cost of the entire procurement covered by this invitation to bid.

31. Abnormally Low Bids

31.1 An abnormally low bid is one where the bid price, in combination with other constituent elements of the bid, appears unreasonably low to the extent that the bid price raises material concerns with the purchaser as to the capability of the bidder to perform the contract for the offered bid price.

31.2 In the event of identification of a potentially abnormally low bid, the purchaser shall seek written clarification from the bidder, including a detailed price analysis of its bid price in relation to the subject matter of the contract, scope, delivery schedule, allocation of risks and responsibilities and any other requirements of the bidding document.

31.3 After evaluation of the price analysis, in the event that the purchaser determines that the bidder has failed to demonstrate its capability to perform the contract for the offered bid price, the purchaser shall reject the bid.

32. Contacting the Purchaser

32.1 From the time of bid opening to the time of contract award, if any bidder wishes to contact the purchaser on any matter related to the bid, it should do so in writing.

32.2 Any effort by a bidder to influence the purchaser in its decisions on bid evaluation, bid comparison, or contract award may result in the rejection of the bidder's bid.

F. Award of contract

33. Post-Qualification

33.1 In the absence of pre-qualification, the purchaser will determine to its satisfaction whether the bidder that is selected as having submitted the lowest priced responsive bid is qualified to perform the contract satisfactorily, in accordance with the criteria listed in ITB clause 18.3.

33.2 The determination will take into account the bidder's financial, technical, and production capabilities. it will be based upon an examination of the documentary evidence of the bidder's qualifications submitted by the bidder, pursuant to ITB clause 18.3, as well as such other information as the purchaser deems necessary and appropriate.

33.3 An affirmative determination will be a prerequisite for award of the contract to the bidder. A negative determination will result in rejection of the bidder's bid, in which event the purchaser will proceed to the next lowest evaluated bid to make a similar determination of that bidder's capabilities to perform satisfactorily.

34. Award Criteria

34.1 Subject to ITB 37, ITB 38 and ITB 39, the purchaser shall award the contract to the successful bidder whose bid has been determined to be substantially responsive and has been determined to be the bid offering the best value for money as per the stipulated bid evaluation criteria, provided further that the bidder is determined to be qualified to perform the contract satisfactorily.

35. Purchaser's Right to Vary Quantities at Time of Award

35.1 The purchaser reserves the right at the time of contract award to increase or decrease, by the percentage indicated **in the BDS**, the quantity of goods and related services originally specified in the schedule of requirements without any change in unit price or other terms and conditions.

36. Purchaser's Right to Accept Any Bid and to Reject Any or All Bids

36.1 The purchaser reserves the right to accept or reject any bid, and to annul the bidding process and reject all bids at any time prior to contract award, without thereby incurring any liability to the affected bidder or bidders.

37. Notice of Intention to Award

37.1 Prior to the expiration of the period of bid validity, the purchaser shall send the notice of intent to award to the successful bidder. the notice of intent to award shall include a statement that the purchaser shall issue a formal notification of award and a draft contract agreement after expiration of the period for filing a bid protest by unsuccessful bidders and the resolution of any bid protests and or appeals that are submitted thereof. Delivery of the notice of intent to award **shall not constitute the formation of a contract** between the purchaser and the successful bidder and no legal or equitable rights shall be created through the delivery of the notice of intent to award.

37.2 At the same time when it issues the notice of intent to award, the purchaser shall also notify, in writing, all other bidders of the results of the bidding. The purchaser shall promptly respond in writing to any unsuccessful bidder who, after receiving notification of the bid evaluation results, makes a written request for a debriefing, or submits a formal protest as provided in the IFAD Procurement Handbook.

38. Bid Protests

38.1 Bidders may protest the results of a procurement only in accordance with the rules and within the time periods established in the module M of the IFAD Procurement Handbook. In case the time periods/deadlines for submitting a protest under the borrower's national procurement system differ from those stipulated in the IFAD Procurement Handbook, the borrower's regulation shall apply.

39. Notification of Award

39.1 Upon expiration of the period for timely filing and the resolution of any bid protests (and appeals, as applicable) and prior to the expiration of the period of bid validity, the purchaser will notify the successful bidder in writing by registered letter that its bid has been accepted through a notification of award letter.

39.2 Until a formal contract is prepared and executed, the notification of award shall constitute a binding contract.

39.3 Upon the successful bidder's furnishing of the performance security pursuant to ITB clause 41, the purchaser will promptly notify the name of the winning bidder to each unsuccessful bidder and will discharge its bid security, pursuant to ITB clause 20.

40. Signing of Contract

40.1 At the same time as the purchaser notifies the successful bidder that its bid has been accepted, the purchaser will send the bidder the contract form provided in the bidding documents, incorporating all agreements between the parties.

40.2 Within fourteen (14) days of receipt of the contract form, the successful bidder shall sign and date the contract and return it to the purchaser.

41. Performance Security

41.1 Within fourteen (14) days of the receipt of notification of award from the purchaser, the successful bidder shall furnish the performance security in accordance with the conditions of contract, as per the performance security form provided in the bidding documents, or in another form acceptable to the purchaser.

41.2 Failure of the successful bidder to comply with the requirement of ITB clause 40.2 or ITB clause 41.1 shall constitute sufficient grounds for the annulment of the award and forfeiture of the bid security, in which event the purchaser may make the award to the next lowest evaluated bidder or call for new bids after getting IFAD's no objection whenever applicable.

Section III. Bid Data Sheet (BDS)

The following specific data for the goods to be procured shall complement, supplement, or amend the provisions in the instructions to bidders (ITB). Whenever there is a conflict, the provisions herein shall prevail over those in ITB.

Introduction	
ITB clause 1.1	Name of purchaser/procuring entity: **Uttarakhand Gramya Vikas Samiti (UGVS)**
ITB clause 1.1	The procurement number is: 193/NCB/Goods/Silage Bags/REAP/2026
ITB clause 1.1	Procurement description: Procurement of Silage Bags under UGVS, REAP
ITB clause 1.2	Purchaser country: India
ITB clause 2.1	The borrower is: ***Uttarakhand Government and UGVS is the lead project agency of Rural Enterprise Acceleration Project and is the procuring entity*** Total amount of financing USD: 105 Million The name of the project is: *Rural Enterprise Acceleration Project (REAP)*
ITB clause 7.2	Joint Venture is Not Allowed
The bidding documents	
ITB clause 11.1	Clarifications may be requested via e-mail sr.procurement@ugvs.org CC to procurement@ugvs.org**.** All requests for clarifications shall be submitted by: 02.07.2026 Upto 3:00 PM The purchaser shall respond to requests for clarifications on or before the start date of online submission of bids. The purchaser's address is: Project Director Rural Enterprise Acceleration Project Uttarakhand Gramya Vikas Samiti Aajeevika Bhawan, Tapowan Road, Dehradun - 248001, Uttarakhand
ITB clause 11.2	A pre-bid conference will be held at 12:00 Noon (local time) on 01.07.2026. Participants may attend the pre-bid conference in-person. Attendance is strongly advised for all prospective bidders or their representatives but is not mandatory.

Preparation and submission of bids	
ITB clause 13.1	The bid must be submitted in the following language: English
ITB clause 16.2 (a)	The port (or point) of destination/delivery is: Office of the District Project Managers (DPM), UGVS- REAP, C/o Chief Development Officer (CDO) of each District Headquarter as per details below: -

Sl. No.	Place of Delivery	No. of Blocks	No. of Silage Bags to be delivered
1	DPM Almora, C/o CDO office, Vikas Bhawan, Almora	11	17,328
2	DPM Bageshwar, C/o CDO office, Vikas Bhawan, Bageshwar	3	6,640
3	DPM Chamoli, C/o CDO office, Vikas Bhawan, Chamoli	9	16,600
4	DPM Champawat, C/o CDO office, Vikas Bhawan, Champawat	4	11,000
5	DPM Dehradun, C/o CDO office, Vikas Bhawan, Dehradun	6	10,575
6	DPM Haridwar, C/o CDO office, Vikas Bhawan, Haridwar	6	11,000
7	DPM Nainital , C/o CDO office, Vikas Bhawan, Nainital	8	13,230
8	DPM Pauri , C/o CDO office, Vikas Bhawan, Pauri	15	27,000
9	DPM Pithoragarh , C/o CDO office, Vikas Bhawan, Pithoragarh	8	13,538
10	DPM Rudraprayag, C/o CDO office, Vikas Bhawan, Rudraprayag	3	6,425
11	DPM Tehri, C/o CDO office, Vikas Bhawan, Tehri	9	14,950
12	DPM U.S. Nagar C/o CDO office, Vikas Bhawan, U.S. Nagar	7	13,840
13	DPM Uttarakashi, C/o CDO office, Vikas Bhawan, Uttarakashi	6	10,485
	Total		**1,72,611**

ITB clause 16.2 (b)	Not Applicable
ITB clause 16.5	The prices quoted by the bidder shall be : Fixed.
ITB clause 17.1	The currency(ies) of the bid shall be as follows: INR The currency(ies) of the payment shall be as follows: INR The currency that shall be used for bid evaluation and comparison is: *Not Applicable.*
ITB clause 18.2	At the present time firms, goods and services from the following countries are excluded from this bidding process: Not applicable
ITB clause 18.3 (a)	Not Required
ITB clause 18.3 (b)	NA
ITB clause 18.3 (d)	The bidders are required to submit its Bids electronically in two (2) folders: **(a) Technical Folder** **(b) Financial Folder** (a) **Technical Folder:** Technical Folder shall include the required documentary evidence to be submitted by the bidder to confirm its qualifications to perform the contract. **1. Basic Eligibility:** (i) The firm should have legal business entity as on date of bid submission. If the bidder is a partnership firm, members of the firm, who may also be a member in another firm are prohibited from submitting bids. (ii) The firm must be either a manufacturer or an authorized dealer of agri-produce packaging materials (e.g., gunny bags, PP bags, HDPE bags), agro-plastics, silage bags, or similar products. (iii) The firm should possess valid GST registration and PAN number. (iv) The firm should not have been blacklisted by any Government Agency / Public Sector understanding / Autonomous Bodies of Government / Corporates for breach of applicable laws or violation of regulatory provisions or breach of agreement.

	(v) Firm should have minimum Average Annual Turnover of INR 5.00 (five) crores for last three (3) F.Y. (i.e. 2022-23, 2023-24 and 2024-25. (vi) Firm should have prior experience of minimum two (2) orders of INR 50.00 (fifty) Lakh each related to supply of agri-produce related packaging material including Gunny Bags / PP Bags / HDPE Bags etc. or Agro-plastics or Silage Bags or related products to Government Department / PSUs or any other private organization in last three (3) F.Y. (i.e. 2022-23, 2023-24 and 2024-25 (Supply Order and Delivery /Acceptance Certificate**.** **Documents to be submitted in Technical Folder:** (i) Business Registration Certificates; (i.e. copy of partnership deed, Certification of incorporation). (ii) PAN and GST Registration Certificate (copy to be submitted). (iii) The firm must be either a manufacturer or and authorized dealer and have manufacturing facility in India. The bidder shall enclose dealership certificate of manufacturing Registration Certificate / License issued by respective department or any other any supporting document in this regard. The firm shall also provide undertaking in this regard on format provided at Bidding Forms Section IV. (iv) Work order and Delivery/Acceptance certificate (respective supportive document for experience) for each assignment should be submitted along with the bid for last three (3) F.Y. (i.e. 2022-23, 2023-24 & 2024-25) (v) Copies of Income Tax Returns (ITR) of the last (3) Three F.Y. (i.e. 2022-23, 2023-24 and 2024-25) (vi) Audited Financial Statements for the last three (3) F.Y. i.e. 2022-23, 2023-24 and 2024-25 (vii) Bid security in original to be submitted physically before the deadline of submission of bid and submitting the copy of bid security online through www.uktenders.gov.in (viii) Power of Attorney in favor of person authorized to sign and submit the bid as bidder's representative on behalf of bidder. (ix) The successful bidder shall be required to submit, prior to execution of the contract agreement, a sample of the silage bag along with a CIPET – Dehradun test report demonstrating compliance with the specifications of this RFB. The same must be submitted to the UGVS-REAP

	office within two (02) week from the date of intimation or within the time specified in the intimation email. In case the submitted sample does not meet the prescribed specifications and quality standards, the bid shall be rejected without further consideration**.** (x) **All other documents required as per this RFB except Financial Bid. No financial information like price should be given in the Technical bid, otherwise the bid shall be summarily rejected.** (b) **Financial Folder:** Financial Folder shall include the rates quoted by the bidder for the required item in the BoQ. **Documents to be submitted in Financial Folder:** As per BoQ given in the financial folder on e-procurement portal. **Bid Evaluation:** Evaluation of Bids will be done in two stages – first of Technical Bid as per basic eligibility and compliance of the RFP conditions. The financial bids of only those bidders shall be opened who have qualified in technical evaluation**.** The selection will be done on **Least Cost Selection (LCS) basis,** The bidder offering lowest cost in the BoQ shall be considered as successful bidder.
ITB clause 19.1 (b)	Silage Bags are required to be available for 3 (Three) years of operation.
ITB clause 20.1 & 20.2	A bid security is required to be submitted with a bid. The bids of those bidders who have not submitted the required bid security in the prescribed form, amount and time as per RFB shall be rejected. The amount of bid security shall be **INR 18.00 Lakh (have to check)** *Bid Security shall be in the form of unconditional Bank Guarantee (as per the format attached under Section IV Bidding Forms) in favor of –* *Project Director, Project Management Unit, Rural Enterprise Acceleration Project (REAP), Dehradun; and shall be submitted in physical form at the address given below on or before the deadline of the submission of bid:* *Project Director* *Rural Enterprise Acceleration Project* *Uttarakhand Gramya Vikas Samiti,*

	Aajeevika Bhawan, Tapowan Road, Raipur Dehradun (Uttarakhand) A Copy of the bid security shall be submitted online through www.uktenders.gov.in
ITB clause 21.1	The period of bid validity shall be 120 days after the date for submission of bids.
ITB clause 22.1	Only one original bid has to submitted online through www.uktenders.gov.in
ITB clause 23.2 (b)	Not Applicable as the bid has to be submitted online through www.uktenders.gov.in
ITB clause 23.2 (c)	Invitation for bids title and procurement number: 193/NCB/Goods/Silage Bags/REAP/2026
ITB clause 24.1	Deadline for submission of bids is 3:00 PM on 22.07.2026
ITB clause 27.1	The opening of bids shall take place at 3:30 PM on 22.07.2026 at the office of Project Director, UGVS, REAP, Aajeevika Bhawan, Tapowan Road, Raipur, Dehradun (Uttarakhand)
ITB clause 30.4	Prices quoted shall correspond to 100 % of the Quantity as specified in the BoQ. The award criteria shall be based on the Lowest Evaluated Price or the Lowest Evaluated Cost.
Contract award	
ITB clause 35.1	The percentage for quantity increase or decrease is 20% (percent).

Section IV. Bidding Forms

1. Bid Form and Price Schedules 35
2. Bid Security Form 39
3. Manufacturer's Authorisation Form 40
4. Format of OEM Self-Declaration Form 41
5. Format of Financial Capability 42
6. Format of Not Blacklisting Declaration 43
7. Format of Power of Attorney for signing of Bid/Proposal 44
8. Bidder Information Form 45

1. Bid Form and Price Schedules

(On bidder's Letter Head)

Procurement no: Date:

To,

Project Director,
Rural Enterprise Acceleration Project,
Uttarakhand Gramya Vikas Samiti,
Aajeevika Bhawan, Tapowan Road,
Dehradun - 248001, Uttarakhand

We, the undersigned, declare that:

1. We have examined and have no reservations to the bidding document, including addenda thereto issued in accordance with the instructions to bidders.

2. We offer to supply in conformity with the bidding document and in accordance with the delivery schedules specified in Section V. Schedule of Requirements referenced above.

3. The total price of our bid, has been uploaded in the BOQ format in the Financial bid uploaded separately.

4. The We have uploaded all documents required to be submitted in the technical and financial folders on uktenders.gov.in. We understand that purchaser may reject our bid in case the documents are missing or deviation from the formats provided.

5. Our bid shall be valid for a period of 120 days from the date fixed for the bid submission deadline in accordance with ITB sub-clause 24.1 through the period of time established in accordance with ITB sub-clause 21.1, and it shall remain binding upon us and may be accepted at any time before the expiration of that period.

6. If our bid is accepted, we commit to obtain a performance security in accordance with GCC clause 10 and as described in ITB clause 41 for the due performance of the contract.

7. We, including any subcontractors or sub-suppliers for any part of the contract, have nationalities from eligible countries *[Insert the nationality of the bidder, including that of all parties that comprise the bidder, if the bidder is a joint venture, and the nationality of each subcontractor and supplier]*.

8. Our firm, its associates, including any subcontractors or suppliers for any part of the contract, have not been declared ineligible by the Fund and have not been subject to sanctions or debarments under the laws or official regulations of the purchaser's country or not been subject to a debarment recognized under the Agreement for Mutual Enforcement of Debarment

Decisions (the "Cross-Debarment Agreement")[3] in accordance with ITB clause 4, beyond those declared in paragraph 13 of this bid submission form.

9. We acknowledge and accept the IFAD Revised Policy on Preventing Fraud and Corruption in its Activities and Operations. We certify that neither our firm nor any person acting for us or on our behalf has engaged in any prohibited practices as provided in ITB clause 3. Further, we acknowledge and understand our obligation to report to anticorruption@ifad.org any allegation of prohibited practice that comes to our attention during the selection process or the contract execution. As part of this, we certify that:

   (a) The prices in this bid have been arrived at independently, without any consultation, communication, or agreement with any other party, including another bidder or competitor, or for the purpose of restricting competition, relating to:

      (i) those prices;

      (ii) the intention to submit an offer; or

      (iii) the methods or factors used to calculate the prices offered.

   (b) The prices in this bid have not been and will not be knowingly disclosed by us, directly or indirectly, to any other bidder or competitor before bid opening unless otherwise explicitly required by law; and

   (c) No attempt has been made or will be made by us to induce any other bidder to submit or not to submit an offer for the purpose of restricting competition.

10. We acknowledge and accept the IFAD Policy on Preventing and Responding to Sexual Harassment, Sexual Exploitation and Abuse. We certify that neither our firm nor any person acting for us or on our behalf has engaged in any sexual harassment, sexual exploitation or abuse, as provided in ITB Clause 4. Further, we acknowledge and understand our obligation to report to ethicsoffice@ifad.org any allegation of sexual harassment, sexual exploitation and abuse that comes to our attention during the selection process or the contract execution.

11. The following commissions, gratuities, or fees have been paid or are to be paid with respect to the bid process: *[Insert complete name of each recipient, its full address, the reason for which each commission or gratuity was paid and the amount and currency of each such commission or gratuity]*.

Name of recipient	Address	Reason	Amount

(If none has been paid or is to be paid, indicate “none.”)

12. We declare that neither the bidder nor any of its directors, partners, proprietors, key personnel, agents, sub-consultants, sub-contractors, consortium and joint venture partners have any

[3] The Cross-Debarment Agreement was entered into by the World Bank Group, the Inter-American Development Bank, the African Development Bank, the Asian Development Bank and the European Bank for Reconstruction and Development, additional information may be located at: http://crossdebarment.org/.

actual, potential or perceived conflict of interest as defined in ITB Clause 7.3 regarding this bid process or the execution of the contract. *[Insert if needed: "other than the following:" and provide a detailed account of the actual, potential or perceived conflict]*. We understand that we have an ongoing disclosure obligation on such actual, potential or perceived conflicts of interest and shall promptly inform the purchaser and the Fund, should any such actual, potential or perceived conflicts of interest arise at any stage of the procurement process or contract execution.

13. The following criminal convictions, administrative sanctions (including debarments) and/or temporary suspensions have been imposed on the bidder and/or any of its directors, partners, proprietors, key personnel, agents, sub-consultants, sub-contractors, consortium and joint venture partners:

Nature of the measure (i.e., criminal conviction, administrative sanction or temporary suspension)	Imposed by	Name of party convicted, sanctioned or suspended (and relationship to bidder)	Grounds for the measure (i.e., fraud in procurement or corruption in contract execution)	Date and time (duration) of measure

If no criminal convictions, administrative sanctions or temporary suspensions have been imposed, indicate "none".

14. We acknowledge and understand that we shall promptly inform the purchaser about any material change regarding the information provided in this bid form.

15. We further understand that the failure to properly disclose any of information in connection with this bid form may lead to appropriate actions, including our disqualification as bidders, the termination of the contract and any other as appropriate under the IFAD Policy on Preventing Fraud and Corruption in its Projects and Operations.

16. We understand that this bid, together with your written acceptance thereof included in your Notification of Award, shall only constitute a binding contract between the firm and the purchaser subject to the preparation and execution of the appropriate contract.

17. We understand that you are not bound to accept the lowest evaluated bid or any other bid that you may receive.

18. We further certify to have read, understood and agreed to be bound by the Privacy Policy of IFAD (accessible at https://www.ifad.org/en/privacy).

Signed:
[Print name]
In the capacity of:
Duly authorized to sign on behalf of:

Price Schedule Forms

{No Price Information shall be given in the Technical Bid, The Price Schedule/BoQ shall be uploaded on the Financial Folder in uktenders.gov.in}

BoQ/Price Schedule (in Excel Format) can be downloaded from e-procurement portal http://uktenders.gov.in along with the bid document.The bidder shall upload duly filled BoQ in the Financial Folder only.

2. Bid Security Form

Whereas *[name of the bidder]* (hereinafter called "the Bidder") has submitted its bid dated *[date of submission of bid]* for the supply of *[name and/or description of the goods]* (hereinafter called "the Bid").

KNOW ALL PEOPLE by these presents that WE *[name of bank]* of *[name of country]*, having our registered office at *[address of bank]* (hereinafter called "the Bank"), are bound unto *[name of purchaser]* (hereinafter called "the Purchaser") in the sum of *[amount]* for which payment well and truly to be made to the said Purchaser, the Bank binds itself, its successors, and assigns by these presents. Sealed with the common seal of the said bank this day of

_____20___.

The conditions of this obligation are:

1. If the Bidder

   (a) withdraws its Bid during the period of bid validity specified by the Bidder on the bid form; or

   (b) does not accept the correction of errors in accordance with the instructions to bidders; or

2. If the Bidder, having been notified of the acceptance of its Bid by the Purchaser during the period of bid validity:

   (a) fails or refuses to execute the contract form, if required; or

   (b) fails or refuses to furnish the performance security, in accordance with the instructions to bidders;

we undertake to pay to the Purchaser up to the above amount upon receipt of its first written demand, without the Purchaser having to substantiate its demand, provided that in its demand the Purchaser will note that the amount claimed by it is due to it, owing to the occurrence of one or both of the two conditions, specifying the occurred condition or conditions.

This guarantee will remain in force up to and including thirty (30) days after the period of bid validity, and any demand in respect thereof should reach the Bank not later than the above date.

_____

[signature of the bank]

3. Manufacturer's Authorisation Form

[See clause 18.3 (a) of the instructions to bidders.]

To: *[name of the purchaser]*

WHEREAS *[name of the manufacturer]* who are established and reputable manufacturers of *[name and/or description of the goods]* having factories at *[address of factory]* do hereby authorise *[name and address of agent]* to submit a bid, and subsequently negotiate and sign the contract with you against procurement no. *[reference of the invitation to bid]* for the above goods manufactured by us.

We hereby extend our full guarantee and warranty as per clause 18 of the general conditions of contract for the goods offered for supply by the above firm against this invitation for bids.

_____

[signature for and on behalf of manufacturer]

[Note: This letter of authority should be on the letterhead of the manufacturer and should be signed by a person competent and having the power of attorney to bind the manufacturer. it should be included by the bidder in its bid.]

4. Format of OEM Self-Declaration Form

[If the Bidder is OEM, then they shall submit a self-declaration of being OEM on the format below.]

We …….[Insert name of OEM]… hereby declare that we are the Original Equipment Manufacturer (OEM) for the items we have offered to supply against this RFB no……..

Signature
Name of Signatory
Designation

Note: This certificate shall be furnished on the bidders' letter head bearing the seal and stamp.

5. Format of Financial Capability

(On Letter Head of the Chartered Accountant Firm)

It is certified that Turnover of M/s. …….. for F.Y **2022-23, 2023-24 and 2024-25** is as mentioned below:

Sl. No.	Financial Year	Turnover (in INR)
1	2022-23	
2	2023-24	
3	2024-25	

Note: This certificate shall be issued by certified Chartered Accountant on their firm's letter head duly signed and stamped. The certificate shall also mention the UDIN No of the Chartered Accountant Firm.

6. Format of Not Blacklisting Declaration

(Title and reference number of the Invitation for proposals/bid)

We hereby declare that our Firm / Company, M/s. …… is **NOT BLACKLISTED** by any Ministry / Department / Undertaking of Government of India, any State Government and / or any Union Territory Administration in India, as on the last date of proposal/bid submission.

We also declare that all the statements, documents, testimonials, certificates, etc., uploaded in our proposal/bid are genuine and the contents thereof are true,

If we are found contravening this undertaking even after award of contract in our favour, we accept disciplinary action by the UGVS including rejection of our proposal/bid. annulment of contract and blacklisting.

Authorized signatory for the Bidder
Signed: _____
Name: _____
Designation:_____
Date: _____

7. Format of Power of Attorney for signing of Bid/Proposal

Know all men by these presents, We……..(name of the firm, address of the registered office) do hereby irrevocably constitute, nominate, appoint and authorise Mr/ Ms (name), …… son/daughter/wife of …… and presently residing at ……., who is presently employed with us / holding the position as ……. , as our true and lawful attorney (hereinafter referred to as the "Attorney") to do in our name and on our behalf, all such acts, deeds and things as are necessary or required in connection with or incidental to submission of our bid for (name of work)……. proposed by Uttarakhand Gram Vikas Samiti (the "UGVS") including but not limited to signing and submission of all applications, bids and other documents and writings, participate in Pre-Applications and other conferences and providing information/ responses to UGVS, representing us in all matters before UGVS, signing and execution of all contracts including the Contract and undertakings consequent to acceptance of our bid, and generally dealing with UGVS in all matters in connection with or relating to or arising out of our bid for the said Work and/ or upon award thereof to us and/or till the entering into of the Contract with UGVS.

AND we hereby agree to ratify and confirm and do hereby ratify and confirm all acts, deeds and things done or caused to be done by our said Attorney pursuant to and in exercise of the powers conferred by this Power of Attorney and that all acts, deeds and things done by our said Attorney in exercise of the powers hereby conferred shall and shall always be deemed to have been done by us.

IN WITNESS WHEREOF WE, ……., THE ABOVE NAMED PRINCIPAL HAVE EXECUTED THIS POWER OF ATTORNEY ON THIS …… DAY OF …… 2026.

For ……..
(Signature, name, designation and address)

(Name, Title and Address of the Attorney)
Accepted
……
(Signature)

Witnesses:
1. ……

2. ……

Note:
This Power of Attorney shall be furnished on a Stamp paper of value not less than Rs. 100, and Notarized.

8. Bidder Information Form

1. Name of Bidder Firm:
2. Year of Incorporation
3. Status –Proprietor Firm / Partnership Firm/ Company etc..
4. GST No:
5. PAN No
6. Address for Correspondence:
7. Name of Authorized Representative:
9. Official Email id for Correspondence:
10. Official Telephone/Mobile no for Correspondence:

Section V. Schedule of Requirements

The delivery schedule expressed as weeks/months stipulates hereafter a delivery date which is the date of delivery (i) at EXW premises, or (ii) to the carrier at the port of shipment when the contract is placed on CIF terms, or (iii) to the first carrier when the contract is placed on CIP terms. In order to determine the correct date of delivery hereafter specified, the purchaser has taken into account the additional time that will be needed for international or national transit to the project site or to another common place.

[The schedule of requirements shall list also under one heading the needed related services which are incidental to the supply of the goods like on-site installation, training on the use of equipment or maintenance services]

<table>
<tr><th>S. No.</th><th>Product /Tools Name</th><th>Tools Specification</th><th>Quantity</th><th>Delivery schedule</th><th>Destination</th></tr>
<tr><td>1</td><td>Silage Bag</td><td>
TYPE OF BAG JUMBO BAG - U+2
BAG SIZE-75x75x75 CM plain white, with lamination (PP)
Safe Working Load (SWL) / Safety Factor (SF) - 500 KG/5:1
• Bottom BODY FABRIC-150 (min) GSM (SKIRT TYPE BAG) POLYPROPLENE (PP) Open top / Closed bottom
• TOP BODY FABRIC- 90 (min) GSM
LOOPS 4X30 CM - SQUARE CORNER LOOP
LINNER: LDPE Material Minimum 50 Microns
PRINTING- two side of bag upto two colour printing
Bag weight (estimated) - 1.50 kg
UV Stabilization: 192 Hour, Minimum 50% of initial break load (Standard Parameter 14887)
<table>
<tr><th colspan="2">Test Required:</th></tr>
<tr><td>Material</td><td>PP</td></tr>
<tr><td>Ash Content</td><td>Maximum upto 4%</td></tr>
<tr><td>Breaking Load (Wrap &Weft)</td><td>Top & Bottom Body 1200N (Min)</td></tr>
<tr><td>UV Stabilization</td><td>192 Hour, Minimum 50% of initial break load (Standard Parameter 14887)</td></tr>
<tr><td>TOP BODY FABRIC (All Sides)</td><td>90 (min) GSM</td></tr>
<tr><td>BOTTOM BODY FABRIC (All Sides)</td><td>150 (Min) GSM</td></tr>
<tr><td>INNER LINNER: LDPE</td><td>LDPE Material Minimum 50 Microns</td></tr>
</table>
</td><td>1,32,780</td><td>Within 90 days from the date of signing of contract</td><td>As Mentioned in Bid Data Sheet (BDS) Clause 16.2 (a)</td></tr>
</table>

		TYPE OF BAG JUMBO BAG - U+2 BAG SIZE-120x120x120 CM plain white, with lamination (PP) Safe Working Load (SWL) / Safety Factor (SF) - 1500 KG/5:1 • Bottom BODY FABRIC-150 (min) GSM (SKIRT TYPE BAG) POLYPROPLENE (PP) Open top / Closed bottom • Top BODY FABRIC- 90 (min) GSM LOOPS 4X30 CM - SQUARE CORNER LOOP LINNER: LDPE Material Minimum 50 Microns PRINTING- two side of bag upto two colour printing Bag weight (estimated) – 3.00 kg UV Stabilization: 192 Hour, Minimum 50% of initial break load (Standard Parameter 14887) **Test Required:** Material: PP Ash Content: Maximum upto 4% Breaking Load (Wrap &Weft): Top & Bottom Body 1200N (Min) UV Stabilization: 192 Hour, Minimum 50% of initial break load (Standard Parameter 14887) TOP BODY FABRIC (All Sides): 90 (min) GSM BOTTOM BODY FABRIC (All Sides): 150 (Min) GSM INNER LINNER: LDPE: LDPE Material Minimum 50 Microns	**39,831**		

Note:

1. The supplier / manufacturer shall be responsible for any manufacturing defect and shall replace the defective products.

Drawings

Printing Text on Bag

Bag 1 – Printing Size 45 cm X 45 cm (Two Opposite Side)

Bag 2 – Printing Size 60 cm X 60 cm (Two Opposite Side)

उत्तराखण्ड ग्राम्य विकास समिति (UGVS)

UGVS-REAP

"ग्रामोत्थान" परियोजना

BAG 1

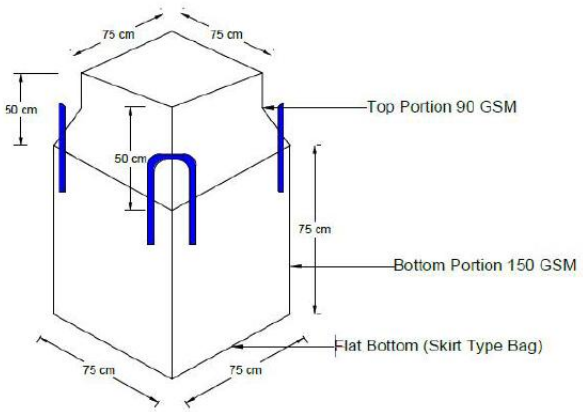

BAG 2

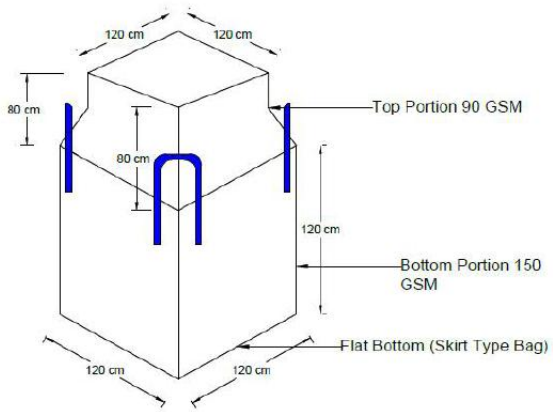

Size wise Delivery Details

Sl. No.	Place of Delivery	No. of Blocks	No. of Bags to be delivered BAG SIZE- (75x75x75)	No. of Bags to be delivered BAG SIZE- (120x120x120)	Total No. of Silage Bags to be delivered
1	DPM Almora, C/o CDO office, Vikas Bhawan, Almora	11	72	17,256	17,328
2	DPM Bageshwar, C/o CDO office, Vikas Bhawan, Bageshwar	3	0	6,640	6,640
3	DPM Chamoli, C/o CDO office, Vikas Bhawan, Chamoli	9	80	16,520	16,600
4	DPM Champawat, C/o CDO office, Vikas Bhawan, Champawat	4	5,000	6,000	11,000
5	DPM Dehradun, C/o CDO office, Vikas Bhawan, Dehradun	6	4,565	6,010	10,575
6	DPM Haridwar, C/o CDO office, Vikas Bhawan, Haridwar	6	10,000	1,000	11,000
7	DPM Nainital , C/o CDO office, Vikas Bhawan, Nainital	8	5,160	8,070	13,230
8	DPM Pauri , C/o CDO office, Vikas Bhawan, Pauri	15	1,000	26,000	27,000
9	DPM Pithoragarh , C/o CDO office, Vikas Bhawan, Pithoragarh	8	256	13,282	13,538
10	DPM Rudraprayag, C/o CDO office, Vikas Bhawan, Rudraprayag	3	75	6,350	6,425
11	DPM Tehri, C/o CDO office, Vikas Bhawan, Tehri	9	625	14,325	14,950
12	DPM U.S. Nagar C/o CDO office, Vikas Bhawan, U.S. Nagar	7	11,920	1,920	13,840
13	DPM Uttarakashi, C/o CDO office, Vikas Bhawan, Uttarakashi	6	1,078	9,407	10,485
	Total		**39,831**	**1,32,780**	**1,72,611**

Section VI. Technical Specifications

The purpose of the technical specifications (TS) is to define the technical characteristics of the goods and related services required by the purchaser. The purchaser shall prepare the detailed TS taking into account that:

- the TS constitute the benchmarks against which the purchaser will verify the technical responsiveness of bids and subsequently evaluate the bids. Therefore, well-defined TS will facilitate preparation of responsive bids by bidders, as well as examination, evaluation, and comparison of the bids by the purchaser.

- the TS shall require that all goods and materials to be incorporated in the goods be new, unused, and of the most recent or current models, and that they incorporate all recent improvements in design and materials, unless provided for otherwise in the contract.

- the TS shall make use of best practices. Samples of specifications from successful similar procurements in the same country or sector may provide a sound basis for drafting the TS.

- standardizing technical specifications may be advantageous, depending on the complexity of the goods and the repetitiveness of the type of procurement. The TS should be broad enough to avoid restrictions on workmanship, materials, and equipment commonly used in manufacturing similar kinds of goods.

- standards for equipment, materials, and workmanship specified in the bidding documents shall not be restrictive. Recognized international standards should be specified as much as possible. When other particular standards or codes of practice are referred to in the TS, whether from the borrower's or from other eligible countries, a statement should follow other authoritative standards that ensure at least a substantially equal quality, then the standards mentioned in the TS will also be acceptable.

- reference to brand names and catalogue numbers should be avoided as far as possible; where unavoidable the words "or at least equivalent" shall always follow such references.

- the TS shall be fully descriptive of the requirements in respect of, but not limited to, the following:

  (a) standards of materials and workmanship required for the production and manufacturing of the goods.

  (b) detailed tests required (type and number).

  (c) other additional work and/or related services required to achieve full delivery/completion.

  (d) detailed activities to be performed by the supplier, and participation of the purchaser thereon.

  (e) list of detailed functional guarantees covered by the warranty and the specification of the liquidated damages to be applied in the event that such guarantees are not met.

- The TS shall specify all essential technical and performance characteristics and

requirements, including guaranteed or acceptable maximum or minimum values, as appropriate. Whenever necessary, the purchaser shall include an additional ad-hoc bidding form, where the bidder shall provide detailed information on such technical performance characteristics in respect to the corresponding acceptable or guaranteed values.

When the purchaser requests that the bidder provides in its bid a part or all of the TS, technical schedules, or other technical information, the purchaser shall specify in detail the nature and extent of the required information and the manner in which it has to be presented by the bidder in its bid.

Technical Specifications Compliance Sheet

(To be submitted with the technical proposal)

<table>
<tr><th>S. No.</th><th>Product /Tools Name</th><th>Specification</th><th>Bidder's Response (Y/N)</th><th>Model and catalogue referred by the bidder</th></tr>
<tr><td>1</td><td>Silage Bag</td><td>
TYPE OF BAG JUMBO BAG - U+2
BAG SIZE-75x75x75 CM plain white, with lamination (PP)
Safe Working Load (SWL) / Safety Factor (SF) -500 KG/5:1
• Bottom BODY FABRIC-150 (min) GSM (SKIRT TYPE BAG) POLYPROPLENE (PP) Open top / Closed bottom
• TOP BODY FABRIC- 90 (min) GSM
LOOPS 4X30 CM - SQUARE CORNER LOOP
LINNER: LDPE Material Minimum 50 Microns
PRINTING- two side of bag upto two colour printing
Bag weight (estimated) - 1.50 kg
UV Stabilization: 192 Hour, Minimum 50% of initial break load (Standard Parameter 14887)
<table>
<tr><th colspan="2">Test Required:</th></tr>
<tr><td>Material</td><td>PP</td></tr>
<tr><td>Ash Content</td><td>Maximum upto 4%</td></tr>
<tr><td>Breaking Load (Wrap &Weft)</td><td>Top & Bottom Body 1200N (Min)</td></tr>
<tr><td>UV Stabilization</td><td>192 Hour, Minimum 50% of initial break load (Standard Parameter 14887)</td></tr>
<tr><td>TOP BODY FABRIC (All Sides)</td><td>90 (min) GSM</td></tr>
<tr><td>BOTTOM BODY FABRIC (All Sides)</td><td>150 (Min) GSM</td></tr>
<tr><td>INNER LINNER: LDPE</td><td>LDPE Material Minimum 50 Microns</td></tr>
</table>
</td><td></td><td></td></tr>
</table>

		TYPE OF BAG JUMBO BAG - U+2 BAG SIZE-120x120x120 CM plain white, with lamination (PP) Safe Working Load (SWL) / Safety Factor (SF) - 1500 KG/5:1 • Bottom BODY FABRIC-150 (min) GSM (SKIRT TYPE BAG) POLYPROPLENE (PP) Open top / Closed bottom • Top BODY FABRIC- 90 (min) GSM LOOPS 4X30 CM - SQUARE CORNER LOOP LINNER: LDPE Material Minimum 50 Microns PRINTING- two side of bag upto two colour printing Bag weight (estimated) – 3.00 kg UV Stabilization: 192 Hour, Minimum 50% of initial break load (Standard Parameter 14887) **Test Required:** Material: PP Ash Content: Maximum upto 4% Breaking Load (Wrap &Weft): Top & Bottom Body 1200N (Min) UV Stabilization: 192 Hour, Minimum 50% of initial break load (Standard Parameter 14887) TOP BODY FABRIC (All Sides): 90 (min) GSM BOTTOM BODY FABRIC (All Sides): 150 (Min) GSM INNER LINNER: LDPE: LDPE Material Minimum 50 Microns		

Detailed TS and standards *[whenever necessary]*.

[Insert detailed description of TS and standards]

Inspections

Inspections and tests:

Physical Inspection of the supplied material shall be done by UGVS to ensure compliance to technical specification as mentioned above and if required may be tested in any independent lab.

The place for inspection of the supplied material shall be:

UGVS-REAP office at Dehradun or DPM offices of each District of Uttarakhand

Section VII. Contract

Contract Agreement

THIS AGREEMENT made the _____ day of_____20_____ between *[name of purchaser]* of the purchaser's country (hereinafter called "the purchaser") of the one part and *[name of supplier]* of *[city and country of supplier]* (hereinafter called "the supplier") of the other part:

WHEREAS the purchaser invited bids for certain goods and ancillary services, viz., *[brief description of goods and services]* and has accepted a bid by the supplier for the supply of those goods and services in the sum of *[contract price in words and figures]* (hereinafter called "the contract price").

NOW THIS AGREEMENT WITNESSETH AS FOLLOWS:

1. In this agreement words and expressions shall have the same meanings as are respectively assigned to them in the conditions of contract referred to.

2. The following documents shall be deemed to form and be read and construed as part of this agreement, viz.:

   (a) the purchaser's notification of award.

   (b) the bid form;

   (c) the special conditions of contract (SCC)

   (d) the general conditions of contract (GCC)

   (e) the self-certification form

   (f) the specification (including schedule of requirements and technical specifications)

   (g) the completed schedules (including price schedules)

   (h) any other document listed in SCC as forming part of the contract

3. In consideration of the payments to be made by the purchaser to the supplier as hereinafter mentioned, the supplier hereby covenants with the purchaser to provide the goods and services and to remedy defects therein in conformity in all respects with the provisions of the contract.

4. The purchaser hereby covenants to pay the supplier in consideration of the provision of the goods and services and the remedying of defects therein, the contract price or such other sum as may become payable under the provisions of the contract at the times and in the manner prescribed by the contract.

IN WITNESS whereof the parties hereto have caused this agreement to be executed in accordance with their respective laws the day and year first above written.

Signed, sealed, delivered by_____the_____(for the purchaser)

Signed, sealed, delivered by_____the_____(for the supplier)

Section VII (A). General Conditions of Contract

Table of clauses

1. Definitions 58
2. Application 59
3. Country of Origin 59
4. Prohibited Practices 59
5. Sexual Harassment, Sexual Exploitation and Abuse 62
6. SECAP Performance Standards 62
7. Standards 62
8. Use of Contract Documents and Information 63
9. Patent Rights 63
10. Performance Security 63
11. Inspections and Tests 64
12. Packing 64
13. Delivery and Documents 65
14. Insurance 65
15. Transportation 65
16. Incidental Services 65
17. Spare Parts 66
18. Warranty 66
19. Payment 67
20. Prices 67
21. Change Orders 67
22. Contract Amendments 67
23. Assignment 68

24.	**Subcontract**	**68**
25.	**Delays in the Supplier's Performance**	**68**
26.	**Liquidated Damages**	**68**
27.	**Termination for Default**	**69**
28.	**Force Majeure**	**69**
29.	**Termination for Insolvency**	**70**
30.	**Termination for Convenience**	**70**
31.	**Settlement of Disputes**	**70**
32.	**Limitation of Liability**	**71**
33.	**Governing Language**	**71**
34.	**Applicable Law**	**71**
35.	**Notices**	**71**
36.	**Taxes and Duties**	**71**

General Conditions of Contract

1. Definitions

1.1 In this contract, the following terms shall be interpreted as indicated:

a) "Fund" means the International Fund for Agricultural Development.

b) "The contract" means the agreement entered into between the purchaser and the supplier, as recorded in the contract form signed by the parties, including all attachments and appendices thereto and all documents incorporated by reference therein.

c) "The contract price" means the price payable to the supplier under the contract for the full and proper performance of its contractual obligations.

d) "The goods" means all of the equipment, machinery, commodities and/or other materials which the supplier is required to supply to the purchaser under the contract.

e) "The services" means those services ancillary to the supply of the goods, such as transportation and insurance, and any other incidental services, such as installation, commissioning, provision of technical assistance, training, and other such obligations of the supplier covered under the contract.

f) "GCC" means the General Conditions of Contract contained in this section.

g) "SCC" means the Special Conditions of Contract.

h) "The purchaser" means the entity purchasing the goods, as named in the SCC.

i) "The purchaser's country" is the purchaser's country.

j) "The supplier" means the individual or firm supplying the goods and services under this contract and named in SCC.

k) "The Project Site", where applicable, means the place or places named in the SCC.

l) "Day" means calendar day.

2. Application

2.1 These GCC shall apply to the extent that they are not superseded by provisions of other parts of the contract.

3. Country of Origin

3.1 All goods and services supplied under the contract shall have their origin in eligible countries and territories, as further elaborated in the SCC.

3.2 For purposes of this clause, "origin" means the place where the goods were mined, grown, or produced, or from which the services are supplied. goods are produced when, through manufacturing, processing, or substantial and major assembly of components, a commercially recognized new product results that is substantially different in basic characteristics or in purpose or utility from its components. The origin of goods and services is distinct from the nationality of the supplier.

4. Prohibited Practices

4.1 The Fund requires that all beneficiaries of IFAD funding, including the purchaser and any bidders, implementing partners, service providers, suppliers, sub-suppliers, contractors, sub-contractors, consultants, sub-consultants, and any of their agents (whether declared or not) and personnel observe the highest standards of ethics during the procurement and execution of such contracts, and comply with IFAD's Policy on Preventing Fraud and Corruption in its Activities and Operations, revised on 12 December 2018 and attached as Section VIII of this document (EB 2018/125/R.6, hereinafter "IFAD's Anti-Corruption Policy").

4.2 For the purposes of these provisions, and consistent with IFAD's Anticorruption Policy, the terms set forth below are defined as follows, and sometimes referred to collectively as "Prohibited Practices":

a) "corrupt practice" is the offering, giving, receiving, or soliciting, directly or indirectly, of anything of value in order to improperly influence the actions of another party;

b) "fraudulent practice" is any act or omission, including a misrepresentation, that knowingly or recklessly misleads, or attempts to mislead, a party in order to obtain a financial or other benefit or to avoid an obligation;

c) "collusive practice" is an arrangement between two or more parties designed to achieve an improper purpose, including improperly influencing the actions of another party;

d) "coercive practice" is impairing or harming, or threatening to impair or harm, directly or indirectly, any party or the property of any party, to improperly influence the actions of that or another party;

e) “obstructive practice” is (i) deliberately destroying, falsifying, altering or concealing evidence that may be material to an investigation by the Fund or making false statements to investigators in order to materially impede an investigation by the Fund; (ii) threatening, harassing or intimidating any party in order to prevent that party from disclosing its knowledge of matters relevant to an investigation by the Fund or from pursuing such an investigation; and/or (iii) the commission of any act intended to materially impede the exercise of the Fund’s contractual rights of audit, inspection and access to information.

4.3 The Fund will deny approval of a proposed contract award if it determines that the firm or individual recommended for award, or any of its personnel or agents, or its sub-consultants, sub-contractors, service providers, suppliers, sub-suppliers and/or any of their personnel or agents, has, directly or indirectly, engaged in any of the prohibited practices in connection with an IFAD-financed and/or IFAD-managed activity or operation, including in competing for the contract.

4.4 In accordance with IFAD’s Anticorruption Policy, the Fund has the right to sanction firms and individuals, including by declaring them ineligible, either indefinitely or for a stated period of time, to participate in any IFAD-financed and/or IFAD-managed activity or operation. This may include ineligibility to: (i) be awarded or otherwise benefit from any IFAD-financed contract, financially or in any other manner; (ii) be a nominated sub-contractor, consultant, manufacturer, supplier, sub-supplier, agent or service provider of an otherwise eligible firm being awarded an IFAD-financed contract; and (iii) receive the proceeds of any loan or grant provided by the Fund.4 The Fund also has the right to unilaterally recognize debarments by any of the International Financial Institutions that are members to the Agreement for Mutual Enforcement of Debarment Decisions if such debarments meet the requirements for mutual recognition under the Agreement for Mutual Enforcement of Debarment Decisions.

4.5 In addition, the Fund has the right to, at any time, declare a misprocurement and/or the ineligibility of any expenditures associated with a procurement process or contract if it determines that prohibited practices occurred in connection with this procurement process or contract and that the borrower/recipient has not taken timely and

[4] For the avoidance of doubt, a sanctioned party’s ineligibility to be awarded a contract shall include, without limitation, (i) applying for pre-qualification, expressing interest in a consultancy, and bidding, either directly or as a nominated sub-contractor, nominated consultant, nominated manufacturer or supplier, or nominated service provider, in respect of such contract, and (ii) entering into an addendum or amendment introducing a material modification to any existing contract.

appropriate action, satisfactory to the Fund, to address such practices when they occur.

4.6 The supplier will take appropriate measures to inform potential sub-contractors, sub-consultants, suppliers, agents and any of its personnel of their obligations under IFAD's Anticorruption Policy and require their compliance with this policy in connection with their involvement in competing for, or executing, this contract.

4.7 Bidders, suppliers, consultants, contractors, and their sub-contractors, sub-consultants, service providers, suppliers, agents and personnel, are required to fully cooperate with any investigation conducted by the Fund into possible prohibited practices, including by making personnel available for interviews and by providing full access to any and all accounts, premises, documents and records (including electronic records) relating to the relevant IFAD-financed and/or IFAD-managed operation or activity and to have such accounts, premises, records and documents audited and/or inspected5 by auditors and/or investigators appointed by the Fund.

4.8 The supplier is obliged to disclose relevant prior sanctions and criminal convictions and any commissions or fees paid or are to be paid to any agents or other party in connection with this procurement process or the execution of the contract.

4.9 If the Fund determines that the supplier, or any of its sub-contractors, sub-consultants, suppliers, personnel or any agent or affiliate of any of them has, directly or indirectly, engaged in prohibited practices in connection with an IFAD-financed or IFAD-managed activity or operation, including in competing for, or executing, this contract, the purchaser may, by written notice, immediately terminate the supplier's employment under the contract and the provisions of GCC 27 shall apply.

4.10 The bidder shall keep all records and documents, including electronic records, relating to this procurement process available for a minimum of three (3) years after notification of completion of the process or, in case the bidder is awarded the contract, execution of the contract.

[5] Inspections include all fact-finding activities deemed relevant by the Fund to address allegations or other indications of possible Prohibited Practices. Such fact-finding activities may include, but are not limited to: accessing and examining a firm's or individual's financial records and information, and making copies thereof as relevant; accessing and examining any other documents, data or information (whether in hard copy or electronic format) deemed relevant for the investigation or audit, and making copies thereof as relevant; interviewing staff and other relevant individuals; performing physical inspections and site visits; and obtaining third party verifications of information. It is the responsibility of the firm or individual under inspection to ensure effective compliance with their duty to cooperate vis-à-vis any potential local laws or regulations or other potentially conflicting obligations.

5.	**Sexual Harassment, Sexual Exploitation and Abuse**	5.1 The Fund requires that all beneficiaries of IFAD Funding, including the purchaser and any bidders, implementing partners, service providers, suppliers, sub-suppliers, contractors, sub-contractors, consultants, sub-consultants, and any of their agents (whether declared or not) and personnel comply with IFAD's Policy on Preventing and Responding to Sexual Harassment, Sexual Exploitation and Abuse. Purchasers, suppliers and bidders shall take all appropriate measures to prevent and prohibit sexual harassment and sexual exploitation and abuse on the part of their personnel and subcontractors or anyone else directly or indirectly employed by them or any of subcontractors in the performance of the contract. Purchasers, suppliers and bidders shall immediately report to the purchaser or IFAD any incidents of sexual harassment and sexual exploitation and abuse arising out of or in connection with the performance of the contract or prior to its execution, including convictions, disciplinary measures, sanctions or investigations. The purchaser may take measures, including immediate termination of the contract, against the supplier, its personnel or any subcontractors, if at any time the purchaser becomes aware of proven acts of sexual harassment, sexual exploitation and abuse by the supplier and/or its personnel, directly or through an agent, in competing for, or in performance of, this contract.
6.	**SECAP Performance Standards**	6.1 The contract shall be implemented in a manner consistent with IFAD's Social, Environmental and Climate Assessment Procedures (SECAP), available on https://www.ifad.org/en/secap.
7.	**Standards**	7.1 The goods supplied under this contract shall conform to the standards mentioned in the technical specifications, and, when no applicable standard is mentioned, to the authoritative standards appropriate to the goods' country of origin. Such standards shall be the latest issued by the concerned institution.

8. Use of Contract Documents and Information

8.1 The supplier shall not, without the purchaser's prior written consent, disclose the contract, or any provision thereof, or any specification, plan, drawing, pattern, sample, or information furnished by or on behalf of the purchaser in connection therewith, to any person other than a person employed by the supplier in the performance of the contract. Disclosure to any such employed person shall be made in confidence and shall extend only so far as may be necessary for purposes of such performance.

8.2 The supplier shall not, without the purchaser's prior written consent, make use of any document or information enumerated in GCC clause 8.1 except for purposes of performing the contract.

8.3 Any document enumerated in GCC clause 8.1, other than the contract itself, shall remain the property of the purchaser and shall be returned (all copies) to the purchaser on completion of the supplier's performance under the contract if so required by the purchaser.

9. Patent Rights

9.1 The supplier shall indemnify the purchaser against all third-party claims of infringement of patent, trademark, or industrial design rights arising from use of the goods or any part thereof in the purchaser's country.

10. Performance Security

10.1 Within fourteen (14) days of receipt of the notification of contract award, the successful bidder shall furnish to the purchaser the performance security in the amount specified in the SCC.

10.2 The proceeds of the performance security shall be payable to the purchaser as compensation for any loss resulting from the supplier's failure to complete its obligations under the contract.

10.3 The performance security shall be denominated in the currency of this contract and shall be in one of the following forms:

a) a bank guarantee or an irrevocable letter of credit issued by a reputable bank located in the purchaser's country or abroad, acceptable to the purchaser, in the form provided in the bidding documents or another form acceptable to the purchaser; or

b) a cashier's or certified check.

10.4 The performance security will be discharged by the purchaser and returned to the supplier not later than thirty (30) days following the date of completion of the supplier's performance obligations under the contract, including any warranty obligations, unless otherwise specified in SCC.

11. Inspections and Tests

11.1 The purchaser or its representative shall have the right to inspect and/or to test the goods to confirm their conformity to the contract specifications at no extra cost to the purchaser. The **SCC** and the technical specifications shall specify what inspections and tests the purchaser requires and where they are to be conducted. The purchaser shall notify the supplier in writing, in a timely manner, of the identity of any representatives retained for these purposes.

11.2 The inspections and tests may be conducted on the premises of the supplier or its subcontractor(s), at point of delivery, and/or at the goods' final destination. If conducted on the premises of the supplier or its subcontractor(s), all reasonable facilities and assistance, including access to drawings and production data, shall be furnished to the inspectors at no charge to the purchaser.

11.3 Should any inspected or tested goods fail to conform to the Specifications, the purchaser may reject the goods, and the supplier shall either replace the rejected goods or make alterations necessary to meet specification requirements free of cost to the purchaser.

11.4 The purchaser's right to inspect, test and, where necessary, reject the goods after the goods' arrival in the purchaser's country shall in no way be limited or waived by reason of the goods having previously been inspected, tested, and passed by the purchaser or its representative prior to the goods' shipment from the country of origin.

11.5 Nothing in GCC clause 11 shall in any way release the supplier from any warranty or other obligations under this contract.

12.Packing

12.1 The supplier shall provide such packing of the goods as is required to prevent their damage or deterioration during transit to their final destination, as indicated in the contract. The packing shall be sufficient to withstand, without limitation, rough handling during transit and exposure to extreme temperatures, salt and precipitation during transit, and open storage. Packing case size and weights shall take into consideration, where appropriate, the remoteness of the goods' final destination and the absence of heavy handling facilities at all points in transit.

12.2 The packing, marking, and documentation within and outside the packages shall comply strictly with such special requirements as shall be expressly provided for in the contract, including additional requirements, if any, **specified in SCC**, and in any subsequent instructions ordered by the purchaser.

13. Delivery and Documents

13.1 Delivery of the goods shall be made by the supplier in accordance with the terms specified in the schedule of requirements.

13.2 For purposes of the contract, “EXW,” “CIF,” “CIP,” and other trade terms used to describe the obligations of the parties shall have the meanings assigned to them by the current edition of *Incoterms* published by the International Chamber of Commerce, Paris.

13.3 Documents to be submitted by the supplier are specified **in the SCC**.

14. Insurance

14.1 The goods supplied under the contract shall be fully insured in a freely convertible currency against loss or damage incidental to manufacture or acquisition, transportation, storage, and delivery in the manner **specified in the SCC.**

14.2 Where delivery of the goods is required by the purchaser on a CIF or CIP basis, the supplier shall arrange and pay for cargo insurance, naming the purchaser as beneficiary.

15. Transportation

15.1 Where the supplier is required under the contract to deliver the goods CIF or CIP, transport of the goods to the port of destination or such other named place of destination in the purchaser’s country as specified in the contract, shall be arranged and paid for by the supplier and the cost thereof shall be included in the contract price. No restriction shall be placed on the choice of carrier.

15.2 Where the supplier is required under the contract to transport the goods to a specified place of destination within the purchaser’s country, defined as the Project Site, transport to such place of destination in the purchaser’s country, including insurance and storage, as shall be specified in the contract, shall be arranged by the supplier, and related costs shall be included in the contract price.

16. Incidental Services

16.1 The supplier may be required to provide any additional services as **specified in the SCC**.

17.Spare Parts

17.1 As **specified in the SCC,** the supplier may be required to provide any or all of the following materials, notifications, and information pertaining to spare parts manufactured or distributed by the supplier:

a) such spare parts as the purchaser may elect to purchase from the supplier, provided that this election shall not relieve the supplier of any warranty obligations under the contract; and

b) in the event of termination of production of the spare parts:

(i) advance notification to the purchaser of the pending termination, in sufficient time to permit the purchaser to procure needed requirements; and

(ii) following such termination, furnishing at no cost to the purchaser, the blueprints, drawings, and specifications of the spare parts, if requested.

18.Warranty

18.1 The supplier warrants that the goods supplied under the contract are new, unused, of the most recent or current models, and that they incorporate all recent improvements in design and materials unless provided otherwise in the contract. The supplier further warrants that all goods supplied under this contract shall have no defect, arising from design, materials, or workmanship (except when the design and/or material is required by the purchaser's specifications) or from any act or omission of the supplier, that may develop under normal use of the supplied goods in the conditions prevailing in the purchaser's country.

18.2 This warranty shall remain valid for twelve (12) months after the goods, or any portion thereof as the case may be, have been delivered to and accepted at the final destination indicated in the contract, or for eighteen (18) months after the date of shipment from the port or place of loading in the source country, whichever period concludes earlier, unless specified otherwise **in the SCC**.

18.3 The purchaser shall promptly notify the supplier in writing of any claims arising under this warranty.

18.4 Upon receipt of such notice, the supplier shall, within the period specified **in the SCC** and with all reasonable speed, repair or replace the defective goods or parts thereof, without costs to the purchaser.

18.5 If the supplier, having been notified, fails to remedy the defect(s) within the period specified **in the SCC**, the purchaser may proceed to take such remedial action as may be necessary, at the supplier's risk and expense and without prejudice to any other rights which the purchaser may have against the supplier under the contract.

19.Payment

19.1 The method and conditions of payment to be made to the supplier under this contract shall be **specified in the SCC.**

19.2 The supplier's request(s) for payment shall be made to the purchaser in writing, accompanied by an invoice describing, as appropriate, the goods delivered and services performed, and by documents submitted pursuant to GCC clause 13, and upon fulfilment of other obligations stipulated in the contract.

19.3 Payments shall be made promptly by the purchaser, but in no case later than forty-five (45) days after submission of an invoice or claim by the supplier.

19.4 The currency in which payments shall be made to the supplier under this contract shall be those **specified in the SCC.**

20. Prices

20.1 Prices charged by the supplier for goods delivered and services performed under the contract shall not vary from the prices quoted by the supplier in its bid except for any price adjustments **authorized in the SCC**.

21.Change Orders

21.1 The purchaser may at any time, by a written order given to the supplier pursuant to GCC clause 35, make changes within the general scope of the contract in any one or more of the following:

a) drawings, designs, or specifications, where goods to be furnished under the contract are to be specifically manufactured for the purchaser;

b) the method of shipment or packing;

c) the place of delivery; and/or

d) the related services to be provided by the supplier.

21.2 If any such change causes an increase or decrease in the cost of, or the time required for, the supplier's performance of any provisions under the contract, an equitable adjustment shall be made in the contract price or delivery schedule, or both, and the contract shall accordingly be amended. Any claims by the supplier for adjustment under this clause must be asserted within thirty (30) days from the date of the supplier's receipt of the purchaser's change order.

22.Contract Amendments

22.1 Subject to GCC clause 21, no variation in or modification of the terms of the contract shall be made except by written amendment signed by the parties.

23. Assignment

23.1 The supplier shall not assign, in whole or in part, its obligations to perform under this contract, except with the purchaser's prior written consent.

24. Subcontract

24.1 The supplier shall notify the purchaser in writing of all subcontracts awarded under this contract if not already specified in the bid. Such notification, in the original bid or later, shall not relieve the supplier from any liability or obligation under the contract.

24.2 Subcontracts must comply with the provisions of GCC clause 3.

25. Delays in the Supplier's Performance

25.1 Delivery of the goods and performance of services shall be made by the supplier in accordance with the time schedule prescribed by the purchaser in the schedule of requirements.

25.2 If at any time during performance of the contract, the supplier or its subcontractor(s) should encounter conditions impeding timely delivery of the goods and performance of services, the supplier shall promptly notify the purchaser in writing of the fact of the delay, its likely duration and its cause(s). As soon as practicable after receipt of the supplier's notice, the purchaser shall evaluate the situation and may at its discretion extend the supplier's time for performance, with or without liquidated damages, in which case the extension shall be ratified by the parties by amendment of contract.

25.3 Except as provided under GCC clause 28, a delay by the supplier in the performance of its delivery obligations shall render the supplier liable to the imposition of liquidated damages pursuant to GCC clause 26, unless an extension of time is agreed upon pursuant to GCC clause 25.2 without the application of liquidated damages.

26. Liquidated Damages

26.1 Subject to GCC clause 25, if the supplier fails to deliver any or all of the goods or to perform the services within the period(s) specified in the contract, the purchaser shall, without prejudice to its other remedies under the contract, deduct from the contract price, as liquidated damages, a sum equivalent to the percentage **specified in the SCC** of the delivered price of the delayed goods or unperformed services for each week or part thereof of delay until actual delivery or performance, up to a maximum deduction of the percentage **specified in the SCC.** Once the maximum is reached, the purchaser may consider termination of the contract pursuant to GCC clause 27.

27. Termination for Default

27.1 The purchaser, without prejudice to any other remedy for breach of contract, by written notice of default sent to the supplier, may terminate this contract in whole or in part:

a) if the supplier fails to deliver any or all of the goods within the period(s) specified in the contract, or within any extension thereof granted by the purchaser pursuant to GCC clause 25;

b) if the supplier fails to perform any other obligation(s) under the contract; or

c) if the Fund determines that the supplier, or any of its sub-contractors, sub-consultants, suppliers, personnel or any agent or affiliate of any of them has, directly or indirectly, engaged in prohibited practices pursuant to GCC 4.

d) If the purchaser becomes aware of any proven acts of sexual harassment, sexual exploitation and abuse by the supplier and/or its personnel, directly or through an agent, pursuant to GCC 5.

27.2 In the event the purchaser terminates the contract in whole or in part, pursuant to GCC clause 27.1, the purchaser may procure, upon such terms and in such manner as it deems appropriate, goods or services similar to those undelivered, and the supplier shall be liable to the purchaser for any excess costs for such similar goods or services. However, the supplier shall continue performance of the contract to the extent not terminated.

28. Force Majeure

28.1 Notwithstanding the provisions of GCC clauses 25, 26, and 27, the supplier shall not be liable for forfeiture of its performance security, liquidated damages, or termination for default if and to the extent that its delay in performance or other failure to perform its obligations under the contract is the result of an event of force majeure.

28.2 For purposes of this clause, “force majeure” means an event beyond the control of the supplier and not involving the supplier’s fault or negligence and not foreseeable. Such events may include, but are not restricted to, acts of the purchaser in its sovereign capacity, wars or revolutions, fires, floods, epidemics, quarantine restrictions, and freight embargoes.

28.3 If a force majeure situation arises, the supplier shall promptly notify the purchaser in writing of such condition and the cause thereof. Unless otherwise directed by the purchaser in writing, the supplier shall continue to perform its obligations under the contract as far as is reasonably practical, and shall seek all reasonable alternative means for performance not prevented by the force majeure event.

29. Termination for Insolvency

29.1 The purchaser may at any time terminate the contract by giving written notice to the supplier if the supplier becomes bankrupt or otherwise insolvent. In this event, termination will be without compensation to the supplier, provided that such termination will not prejudice or affect any right of action or remedy which has accrued or will accrue thereafter to the purchaser.

30. Termination for Convenience

30.1 The purchaser, by written notice sent to the supplier, may terminate the contract, in whole or in part, at any time for its convenience. The notice of termination shall specify that termination is for the purchaser's convenience, the extent to which performance of the supplier under the contract is terminated, and the date upon which such termination becomes effective.

30.2 The goods that are complete and ready for shipment within thirty (30) days after the supplier's receipt of notice of termination shall be accepted by the purchaser at the contract terms and prices. For the remaining goods, the purchaser may elect:

a) to have any portion completed and delivered at the contract terms and prices; and/or

b) to cancel the remainder and pay to the supplier an agreed amount for partially completed goods and services and for materials and parts previously procured by the supplier.

31. Settlement of Disputes

31.1 If any dispute or difference of any kind whatsoever shall arise between the purchaser and the supplier in connection with or arising out of the contract, the parties shall make every effort to resolve amicably such dispute or difference by mutual consultation.

31.2 If, after thirty (30) days, the parties have failed to resolve their dispute or difference by such mutual consultation, then either the purchaser or the supplier may give notice to the other party of its intention to commence arbitration, as hereinafter provided, as to the matter in dispute, and no arbitration in respect of this matter may be commenced unless such notice is given.

a) Any dispute or difference in respect of which a notice of intention to commence arbitration has been given in accordance with this clause shall be finally settled by arbitration. Arbitration may be commenced prior to or after delivery of the goods under the contract.

b) Arbitration proceedings shall be conducted in accordance with the rules of procedure **specified in the SCC.**

31.3 Notwithstanding any reference to arbitration herein:

a) the parties shall continue to perform their respective obligations under the contract unless they otherwise agree; and

b) the purchaser shall pay the supplier any monies due to the supplier.

32. Limitation of Liability

32.1 Except in cases of criminal negligence or willful misconduct, and in the case of infringement pursuant to GCC clause 9,

a) the supplier shall not be liable to the purchaser, whether in contract, tort, or otherwise, for any indirect or consequential loss or damage, loss of use, loss of production, or loss of profits or interest costs, provided that this exclusion shall not apply to any obligation of the supplier to pay liquidated damages to the purchaser; and

b) the aggregate liability of the supplier to the purchaser, whether under the contract, in tort or otherwise, shall not exceed the total contract price, provided that this limitation shall not apply to the cost of repairing or replacing defective equipment.

33. Governing Language

33.1 The contract shall be written in the language specified **in the SCC**.

34. Applicable Law

34.1 The contract shall be interpreted in accordance with the laws of the purchaser's country.

35. Notices

35.1 Any notice given by one party to the other pursuant to this contract shall be sent to the other party in writing to the address **specified in SCC.**

35.2 A notice shall be effective when delivered or on the notice's effective date, whichever is later.

36. Taxes and Duties

36.1 A foreign supplier shall be entirely responsible for all taxes, stamp duties, license fees, and other such levies imposed outside the purchaser's country.

36.2 A local supplier shall be entirely responsible for all taxes, duties, license fees, etc., incurred until delivery of the contracted goods to the purchaser.

Section VII (B). Special Conditions of Contract

The following SCC shall supplement the GCC. Whenever there is a conflict, the provisions herein shall prevail over those in the GCC. The corresponding clause number of the GCC is indicated in parentheses.

GCC clause 1 - Definitions

GCC 1.1 (h)—The purchaser is: ***Uttarakhand Gramya Vikas* Samiti (UGVS)**

GCC 1.1 (j)—The supplier is:

GCC 1.1 (k) – The project site is: Office of the District Project Managers (DPM), UGVS- REAP, C/o Chief Development Officer (CDO) of each District Headquarter

GCC clause 3.1 - Country of Origin

All countries and territories are eligible except those sanctioned under chapter VII of the resolutions of the Security Council of the United Nations.

GCC clause 10.1 - Performance Security

The amount of performance security, as a percentage of the contract price, shall be a minimum of 5 percent (%) of the contract price.

GCC clause 10.4 - Performance Security

Discharge of the performance security shall take place within 30 days following the date of completion of the supplier's performance obligations under the contract.

.

GCC clause 11.1 - Inspections and Tests

Inspection and tests prior to shipment of goods and at final acceptance are as follows:

- the successful bidder shall be required to provide a pre-shipment inspection and testing report of the product by an certified independent entity.

GCC clause 12.2 - Packing

Packing shall be suitable for the kind the goods being procured and the transportation method used. The additional packing, marking and documentation shall be as follows: As per

Manufacturer's Standard**.**

GCC clause 13.3 - Delivery and Documents

For goods supplied from abroad:

[Example for CIF terms]

Upon shipment, the supplier shall notify the purchaser and the insurance company with the full details of the shipment, including contract number, description of goods, quantity, the vessel, the bill of lading number and date, port of loading, date of shipment, port of discharge, etc. The supplier shall mail the following documents to the purchaser, with a copy to the insurance company:

(i) copies of the supplier's invoice showing goods' description, quantity, unit price, and total amount;

(ii) original and *[insert number]* copies of the negotiable, clean, on-board bill of lading marked "freight prepaid" OR *[insert number]* copies of nonnegotiable bill of lading;

(iii) copies of the packing list identifying contents of each package;

(iv) insurance certificate;

(v) manufacturer's or supplier's warranty certificate;

(vi) inspection certificate, issued by the nominated inspection agency, and the supplier's factory inspection report; and

(vii) certificate of origin.

The above documents shall be received by the purchaser at least one week before arrival of the goods at the port or place of arrival and, if not received, the supplier will be responsible for any consequent expenses.

For goods from within the purchaser's country:

[Example for EXW terms: select one or more of those indicated below]

Upon delivery of the goods to the transporter, the supplier shall notify the purchaser and mail the following documents to the purchaser:

(i) copies of the supplier's invoice showing goods' description, quantity, unit price, and total amount;

(ii) delivery note, or truck receipt;

(iii) manufacturer's or supplier's warranty certificate;

(iv) The successful bidder will need to provide pre dispatch Test report by CIPET - Dehradun. The cost shall be borne by the successful bidder itself.; and

(v) certificate of origin.

The above documents shall be received by the purchaser before arrival of the goods and, if not received, the supplier will be responsible for any consequent expenses.

GCC clause 14.1 - Insurance

The Insurance shall be in an amount equal to 110 percent of the CIF or CIP value of the goods from “warehouse” to “warehouse” on “all risks” basis, including war risks and strikes.

GCC clause 16.1 – Incidental Services

The supplier may be required to provide any or all of the following services, including additional services,

[Example:]

(a) performance or supervision of on-site assembly and/or start-up of the supplied goods;

(b) furnishing of tools required for assembly and/or maintenance of the supplied goods;

(c) furnishing of a detailed operations and maintenance manual for each appropriate unit of the supplied goods;

(d) performance or supervision or maintenance and/or repair of the supplied goods, for a period of time agreed by the parties, provided that this service shall not relieve the supplier of any warranty obligations under this contract; and

(e) training of the purchaser’s personnel, at the supplier’s plant and/or on-site, in assembly, start-up, operation, maintenance, and/or repair of the supplied goods.

GCC clause 17.1 - Spare Parts

Additional spare parts requirements are:

[Example:]

The supplier shall carry sufficient inventories to assure ex-stock supply of consumable spares for the goods. Other spare parts and components shall be supplied within a maximum period of two (2) months from placing of the purchase order.

GCC clause 18.2 - Warranty

[Example:]

The warranty period shall be *[insert]* hours of operation or *[insert]* months from date of acceptance of the goods or *[insert]* months from the date of shipment, whichever occurs earlier.

GCC clause 18.4 - Repair or Replacement of Defective Goods

The period for correction of defects in the warranty period is *[15]* days.

GCC clause 18.5 – Failure to Repair or Replace Defective Goods

The period for correction of defects in the warranty period is *[15]* days.

GCC clause 19.1 – Payment

The method and conditions of payment to be made to the supplier under this contract shall be:

[Example:]

Payment for goods supplied from abroad:

Payment shall be made in the following manner:

(i) **Advance payment:** Ten (10) percent of the contract price shall be paid within forty-five (45) days of signing of the contract, and upon submission of claim and a bank guarantee for equivalent amount valid until the goods are delivered and in the form provided in the bidding documents or another form acceptable to the purchaser.

(ii) **On shipment:** Eighty (80) percent of the contract price of the goods shipped shall be paid through irrevocable confirmed letter of credit opened in favour of the supplier in a bank in its country, upon submission of documents specified in GCC Clause 13.

(iii) **On acceptance:** Ten (10) percent of the contract price of goods received shall be paid within forty-five (45) days of receipt of the goods upon submission of claim supported by the acceptance certificate issued by the purchaser.

Payment for goods and services supplied from within the purchaser's country: Payment for goods and services supplied from within the purchaser's country shall be made, as follows:

(i) **Advance payment:** Ten (10) percent of the contract price shall be paid within fifteen (15) days of signing of the contract against a simple receipt and a bank guarantee for the equivalent amount and in the form provided in the bidding documents or another form acceptable to the purchaser.

(ii) **On delivery:** The payment shall be made within 15 days of submission and acceptance of the invoice against part delivery of goods. Supplier may raise the invoice for the quantity delivered time to time, However the whole quantity shall be delivered within agreed delivery period. The payment shall be made on

receipt of the goods and upon submission of the documents specified in GCC Clause 13.

(iii) **On acceptance:** The remaining ten (10) percent of the contract price shall be paid to the supplier within forty-five (45) days after the date of the acceptance certificate for the respective delivery issued by the purchaser.

GCC clause 19.4 – Currency of Payment

Payment for goods supplied from abroad:

Payment of foreign currency portion shall be made in *Indian Rupee*

Payment of local currency portion shall be made in *[INR]* within thirty (30) days of presentation of claim supported by a certificate from the purchaser declaring that the goods have been delivered and that all other contracted services have been performed

Payment for goods and services supplied from within the purchaser's country:

Payment for goods and services supplied from within the purchaser's country shall be made in *[INR]*.

GCC clause 20.1 Price Adjustments

The prices charged for the goods supplied and the related services performed shall not be adjustable.

GCC clause 26.1 - Liquidated Damages

The applicable rate for liquidated damages is *0.5* percent per week or part thereof. The maximum deduction for liquidated damages is *10* percent.

[Applicable rate should not exceed one-half (0.5) percent per week, and the maximum should not exceed ten percent (10%) of the contract price.]

GCC clause 31.2 (b) - Settlement of Disputes

The basis of arbitration shall be:

[Example]

For a contract with a foreign supplier:

Any dispute, controversy or claim arising out of or relating to this contract, or breach, termination or invalidity thereof, shall be settled by arbitration in accordance with the UNCITRAL Arbitration Rules as at present in force. The place of arbitration shall be *[insert*

city/country].

or

For a contract with a supplier national of the purchaser's country:

In the case of a dispute between the purchaser and a supplier who is a national of the purchaser's country, the dispute shall be referred to arbitration in accordance with Arbitration and Conciliation Act, 1996 and any amendments thereto.

GCC Clause 33.1 – Governing Language

The language of the contract is *[***English***.]* .

GCC Clause 35.1 - Notices

The purchaser's address for notice purposes is *[insert full address]*. The supplier's address for notice purposes is_____.

Section VII (C). Contract Forms

1. Performance Security Form

To: *[name of purchaser]*

WHEREAS *[name of supplier]* (hereinafter called "the supplier") has undertaken, in pursuance of contract No. *[reference number of the contract]* dated_____20 to supply *[description of goods and services]* (hereinafter called "the contract").

AND WHEREAS it has been stipulated by you in the said contract that the supplier shall furnish you with a bank guarantee by a reputable bank for the sum specified therein as security for compliance with the supplier's performance obligations in accordance with the contract.

AND WHEREAS we have agreed to give the supplier a guarantee:

THEREFORE WE hereby affirm that we are guarantors and responsible to you, on behalf of the supplier, up to a total of *[amount of the guarantee in words and figures]*, and we undertake to pay you, upon your first written demand declaring the supplier to be in default under the contract and without cavil or argument, any sum or sums within the limits of *[amount of guarantee]* as aforesaid, without your needing to prove or to show grounds or reasons for your demand or the sum specified therein.

This guarantee is valid until the_____day of_____20_.

Signature and seal of the guarantors

_____

[name of bank or financial institution]

_____

[address]

_____

[date]

2. Bank Guarantee Form for Advance Payment

To: *[name of purchaser] [name of contract]*

Gentlemen:

In accordance with the payment provision included in the special conditions of contract, which amends clause 19 of the general conditions of contract to provide for advance payment, *[name and address of supplier]* (hereinafter called "the supplier") shall deposit with the purchaser a bank guarantee to guarantee its proper and faithful performance under the said clause of the contract in an amount of *[amount of guarantee in figures and words]*.

We, the *[bank or financial institution]*, as instructed by the supplier, agree unconditionally and irrevocably to guarantee as primary obligator and not as surety merely, the payment to the purchaser on its first demand without whatsoever right of objection on our part and without its first claim to the Supplier, in the amount not exceeding *[amount of guarantee in figures and words]*.

We further agree that no change or addition to or other modification of the terms of the contract to be performed thereunder or of any of the contract documents which may be made between the purchaser and the Supplier, shall in any way release us from any liability under this guarantee, and we hereby waive notice of any such change, addition, or modification.

This guarantee shall remain valid and in full effect from the date of the advance payment received by the Supplier under the contract until *[date]*.

Yours truly,

Signature and seal of the guarantors

_____

[name of bank or financial institution]

_____

[address]

_____

[date]

3. Self-Certification Form

This self-certification form is to be completed by the contractor. The contractor shall submit the completed form together with the signed contract agreement to *[insert name of procuring entity]*. Instructions for completing this form are provided below.

Full legal name of supplier:	
Full legal name of supplier's legal representative and position:	
Full name and number of contract:	
Project with which contract was signed:	
Country:	
Date:	

I hereby certify that I am the authorized representative of *[name of the supplier]*, as well as that the information provided herein is true and accurate in all material respects and understand that any material misstatement, misrepresentation or failure to provide the information requested in this self-certification may result in sanctions and remedies, including the suspension or termination of the contract between the supplier and the procuring entity, as well as the permanent ineligibility to participate in IFAD-financed and/or IFAD-managed activities and operations, in accordance with the IFAD Procurement Guidelines, the IFAD Procurement Handbook and other applicable IFAD policies and procedures, including **IFAD's Policy on Preventing Fraud and Corruption in its Activities and Operations** (accessible at www.ifad.org/anticorruption_policy) and its **Policy on Preventing and Responding to Sexual Harassment, Sexual Exploitation and Abuse** (accessible at https://www.ifad.org/en/document-detail/asset/40738506).

Authorized Signature: _____ **Date:** _____

Printed Name of Signatory: _____

- ❑ The supplier certifies that itself, including its director(s), partner(s), proprietor(s), key personnel, agents, sub-consultants, sub-contractors, consortium and joint venture partners have **NOT** engaged in fraudulent, corrupt, collusive, coercive or obstructive practices, in connection with the present procurement process and this contract.

- ❑ The supplier declares that the following criminal convictions, administrative sanctions (including debarments under the Agreement for Mutual Enforcement of Debarment Decisions or the "Cross-Debarment Agreement")[6] and/or temporary suspensions have been imposed on the supplier and/or any of its directors, partners, proprietors, key personnel, agents, sub-consultants, sub-contractors, consortium and joint venture partners:

Nature of the measure (i.e., criminal conviction, administrative sanction or temporary suspension)	Imposed by	Name of party convicted, sanctioned or suspended (and relationship to supplier)	Grounds for the measure (i.e., fraud in procurement or corruption in contract execution)	Date and time (duration) of measure

If no criminal convictions, administrative sanctions or temporary suspensions have been imposed, indicate "none".

- ❑ The supplier certifies that its director(s), proprietor(s), and personnel, and the personnel of its agents, sub-consultants, sub-contractors, consortium and joint venture partners are **NOT** subject to a criminal conviction, administrative sanctions or investigations for incidents of sexual harassment and sexual exploitation and abuse.

- ❑ The supplier certifies that itself, its proprietor(s), agents, sub-consultants, sub-contractors, consortium and joint venture partners have **NO** actual, potential or reasonably perceived conflicts of interest and specifically that they:

  - ❑ Do not have any actual or potential, and do not reasonably appear to have, at least one controlling partner in common with one or more other parties in the bidding process or the execution of the contract;

  - ❑ Do not have any actual or potential, and do not reasonably appear to have the same legal representative as another bidder for purposes of this bid or execution of the contract;

  - ❑ Do not have any actual or potential, and do not reasonably appear to have a relationship, directly or through common third parties, that puts them in a position to have access to undue or undisclosed information about or influence over the bid process and the execution of the contract, or influence the decisions of the procuring entity regarding the selection process for this procurement or during the execution of the contract;

  - ❑ Do not participate and do not potentially or reasonably appear to participate in more than one bid in this process; and

- ❑ Do not have any actual or potential, and do not reasonably appear to have, a business or family relationship with, a member of the procuring entity's board of directors or its personnel , the Fund or its personnel, or any other individual that was, has been or might reasonably be directly or indirectly involved in any part of (i) the preparation of the bidding document, (ii) the selection process for this procurement, or (iii) execution of the contract, unless the actual, potential or reasonably conflict stemming from this relationship has been explicitly authorized by the Fund in writing.

- ❑ **[To be completed only if the previous boxes were not checked]**
  The supplier declares the following actual, potential or reasonably perceived conflicts of interest, that may affect, or might reasonably be perceived by others to affect, impartiality in any matter relevant to the procurement process, including the selection process and the execution of the contract, with the understanding and acceptance that any action upon this disclosure shall be entirely under the Fund's discretion:

  [provide detailed description of any actual, potential or reasonably perceived conflicts of interest including their nature and the personnel, proprietor(s), agents, sub-consultants, sub-contractors, consortium or joint venture partners affected.]

❑ The supplier certifies that **NO** gratuities, fees, commissions, gifts or anything else of value, other than those shown in the bid, have been paid or exchanged or are to be paid or exchanged with respect to the present procurement process and this contract.

OR

❑ **[To be completed only if the previous box was not checked]**
The supplier declares that the following gratuities, fees, commissions, gifts or anything else of value have been exchanged, paid or are to be exchanged or paid with respect to the present procurement process and this contract:

- [Name of Recipient/Address/Date/Reason/Amount]
- [Name of Recipient/Address/Date/Reason/Amount]

❑ The supplier acknowledges and accepts to notify the procuring entity in the event of any material change in connection with this self-certification form throughout the duration of the contract.

[6] The Cross-Debarment Agreement was entered into by the World Bank Group, the Inter-American Development Bank, the African Development Bank, the Asian Development Bank and the European Bank for Reconstruction and Development, additional information may be located at: http://crossdebarment.org/.

Instructions for completing the self-certification form

The World Bank listing of ineligible firms and individuals is a searchable database that returns a positive or negative search results page upon submission of a name to be searched, in order to document the eligibility.

The supplier should print out, date, and attach the results page(s) to the self-certification form, which should read, "no matching records found".

If (a) record(s) has/have been found – i.e. the results page(s) shows one or more individuals or entities, including the supplier itself are ineligible for contracts of the World Bank on the grounds of "cross-debarment", the supplier should provide a detailed account of these sanctions and their duration as applicable or notify the procuring entity and in case the supplier believes the finding is a "false positive".

The procuring entity will determine whether to proceed with the contract or allow the supplier to make a substitution. This determination will be made on a case by case basis and will require approval by IFAD regardless of the estimated value of the proposed contract.

All of these documents must be retained by the supplier as part of the overall record of the contract with the procuring entity for the duration of the contract and for a minimum period of three years following the completion of the contract.

Section VIII. Revised IFAD Policy on Preventing Fraud and Corruption in its Activities and Operations

I. Introduction

1. The Fund recognizes that the prevention and mitigation of fraud and corruption in its activities and operations are core components of its development mandate and fiduciary duties. The Fund does not tolerate the diversion or waste of its resources through the practices defined in paragraph 6 below.
2. The objective of this policy is to establish the general principles, responsibilities and procedures to be applied by the Fund in preventing and addressing prohibited practices in its activities and operations.
3. This policy takes effect on the date of its issuance. It supersedes and replaces the IFAD Policy on Preventing Fraud and Corruption in its Activities and Operations (EB 2005/85/R.5/Rev.1) dated 24 November 2005.

II. Policy

A. General principles

4. The Fund has no tolerance towards prohibited practices in its activities and operations. All individuals and entities listed in paragraph 7 below must take appropriate action to prevent, mitigate and combat prohibited practices when participating in an IFAD-financed and/or IFAD-managed operation or activity.
5. The Fund endeavours to ensure that individuals and entities that help to prevent or report, in good faith, allegations of prohibited practices are protected against retaliation and to protect individuals and entities that are the subject of unfair or malicious allegations.

B. Prohibited practices

6. The following practices are considered to be prohibited practices when engaged in connection with an IFAD-financed and/or IFAD-managed operation or activity:
   (a) A “corrupt practice” is the offering, giving, receiving or soliciting, directly or indirectly, of anything of value in order to improperly influence the actions of another party;
   (b) A “fraudulent practice” is any act or omission, including a misrepresentation, that knowingly or recklessly misleads, or attempts to mislead, a party in order to obtain a financial or other benefit or to avoid an obligation;
   (c) A “collusive practice” is an arrangement between two or more parties designed to achieve an improper purpose, including improperly influencing the actions of another party;

(d) A “coercive practice” is impairing or harming, or threatening to impair or harm, directly or indirectly, any party or the property of the party in order to improperly influence the actions of that or another party;

(e) An “obstructive practice” is: (i) deliberately destroying, falsifying, altering or concealing evidence that may be material to an investigation by the Fund or making false statements to investigators in order to materially impede an investigation by the Fund; (ii) threatening, harassing or intimidating any party in order to prevent that party from disclosing its knowledge of matters relevant to an investigation by the Fund or from pursuing such an investigation; and/or (iii) the commission of any act intended to materially impede the exercise of the Fund’s contractual rights of audit, inspection and access to information.

C. Scope

7. This policy applies to all IFAD-financed and/or IFAD-managed operations and activities and to the following individuals and entities:

(a) IFAD staff and other persons working for IFAD as non-staff personnel (“IFAD

(b) staff and non-staff personnel”);

(c) Individuals and entities holding a commercial contract with the Fund and any of their agents or personnel (“vendors”);

(d) Public entities receiving IFAD financing or financing managed by the Fund and any of their agents or personnel (“government recipients”) and private entities receiving IFAD financing or financing managed by the Fund and any of their agents or personnel (“non-government recipients”) (all collectively referred to as “recipients”); and

(e) Individuals and entities, other than those referred to above, that receive, apply to receive, are responsible for the deposit or transfer of, or take or influence decisions regarding the use of proceeds from IFAD financing or financing managed by the Fund, including, but not limited to, implementing partners, service providers, contractors, suppliers, subcontractors, sub- suppliers, bidders, consultants and any of their agents or personnel. (All such individuals and entities are collectively referred to as “third parties”.)

D. Responsibilities

(i) Responsibilities of the Fund

8. The Fund endeavours to prevent, mitigate and combat prohibited practices in its operations and activities. This may include adopting and maintaining:

(a) Communication channels and a legal framework designed to ensure that this policy is communicated to IFAD staff and non-staff personnel, vendors, recipients and third parties and that it is reflected in procurement documents and contracts relating to IFAD-financed and/or IFAD-managed activities and operations;

(b) Fiduciary controls and supervisory processes designed to support adherence to this policy by IFAD staff and non-staff personnel, vendors, recipients and third parties;

(c) Measures relating to the receipt of confidential complaints, whistle-blower protection, investigations, sanctions and disciplinary measures which are designed to ensure that prohibited practices can be properly reported and addressed; and

(d) Measures designed to ensure that the Fund can report individuals and entities that have been found to have engaged in prohibited practices to other multilateral organizations which may be exposed to similar actions by the same individuals and entities and to local authorities in cases where local laws may have been violated.

(ii) Responsibilities of IFAD staff and non-staff personnel, vendors and third parties

9. When participating in an IFAD-financed and/or IFAD-managed operation or activity, IFAD staff and non-staff personnel, vendors and third parties will:

(a) Refrain from engaging in prohibited practices;

(b) Participate in due diligence checks and disclose, as required, information relating to themselves or any of their key personnel concerning relevant criminal convictions, administrative sanctions and/or temporary suspensions; information concerning agents engaged in connection with a procurement process or contract, including the commissions or fees paid or to be paid; and information concerning any actual or potential conflicts of interest in connection with a procurement process or the execution of a contract;

(c) Promptly report to the Fund any allegations or other indications of prohibited practices that come to their attention by virtue of their involvement in an IFAD-financed and/or IFAD-managed operation or activity;

(d) Fully cooperate with any investigation conducted by the Fund, including by making personnel available for interviews and providing full access to any and all accounts, premises, documents and records (including electronic records) relating to the relevant IFAD-financed and/or IFAD-managed operation or activity, and by having such accounts, premises, documents and records audited and/or inspected by auditors and/or investigators appointed by the Fund; and

(e) Maintain strict confidentiality regarding any and all information received as a consequence of their participation in an IFAD investigation or sanctioning process.

10. When participating in an IFAD-financed and/or IFAD-managed operation or activity, vendors and third parties will maintain all accounts, documents and records relating to that operation or activity for an adequate period of time, as specified in the relevant procurement documents or contract.

(iii) Responsibilities of recipients

11. When participating in an IFAD-financed and/or IFAD-managed operation or activity, recipients will take appropriate action to prevent, mitigate and combat prohibited practices. In particular, they will:

(a) Adopt appropriate fiduciary and administrative practices and institutional arrangements in order to ensure that the proceeds of any IFAD financing or

financing managed by the Fund are used only for the purposes for which they were provided;

(b) During selection processes and/or prior to entering into a contractual relationship with a third party, conduct appropriate due diligence checks of the selected bidder or potential contractor, including by verifying whether the selected bidder or potential contractor is publicly debarred by any of the IFIs that are signatories to the Agreement for Mutual Enforcement of Debarment Decisions[7] and, if so, whether the debarment meets the requirements for mutual recognition under the Agreement for Mutual Enforcement of Debarment Decisions;

(c) Take appropriate action to inform third parties and beneficiaries (defined as "persons whom the Fund intends to serve through its grants and loans") of the present policy as well as the Fund's confidential and secure e-mail address for the receipt of complaints concerning prohibited practices;

(d) Include provisions in procurement documents and contracts with third parties which:

(i) Require third parties to disclose, in the course of a procurement process and any time thereafter, information relating to themselves or any of their key personnel concerning relevant criminal convictions, administrative sanctions and/or temporary suspensions; information concerning agents engaged in connection with a procurement process or the execution of a contract, including the commissions or fees paid or to be paid; and information concerning any actual or potential conflicts of interest in connection with a procurement process or the execution of a contract;

(ii) Require third parties to promptly report to the Fund any allegations or other indications of prohibited practices that come to their attention by virtue of their involvement in an IFAD-financed and/or IFAD-managed operation or activity;

(iii) Inform third parties of the Fund's jurisdiction to investigate allegations and other indications of prohibited practices and to impose sanctions on third parties for such practices in connection with an IFAD-financed and/or IFAD-managed operation or activity;

(iv) Require third parties to fully cooperate with any investigation conducted by the Fund, including by making personnel available for interviews and by providing full access to any and all accounts, premises, documents and records (including electronic records) relating to the relevant IFAD- financed and/or IFAD-managed operation or activity and to have such accounts, premises, records and documents audited and/or inspected

(v) by auditors and/or investigators appointed by the Fund;

(vi) Require third parties to maintain all accounts, documents and records relating to an IFAD-financed and/or IFAD-managed operation or activity for an adequate period of time as agreed with the Fund;

[7] The Agreement for Mutual Enforcement of Debarment Decisions, dated 9 April 2010, was signed by five of the leading IFIs, namely, the African Development Bank Group, the Asian Development Bank, the European Bank for Reconstruction and Development, the Inter-American Development Bank and the World Bank Group.

(vii) Inform third parties of the Fund's policy of unilaterally recognizing debarments imposed by other IFIs if such debarments meet the requirements for mutual recognition under the Agreement for Mutual Enforcement of Debarment Decisions; and

(viii) Provide for early contract termination or suspension by the recipient if such termination or suspension is required as a consequence of a temporary suspension or sanction imposed or recognized by the Fund;

(e) Promptly inform the Fund of any allegations or other indications of Prohibited Practices that come to their attention;

(f) Fully cooperate with any investigation conducted by the Fund, including by making personnel available for interviews and by providing full access to any and all accounts, premises, documents and records (including electronic records) relating to the relevant IFAD-financed and/or IFAD-managed operation or activity and to have such accounts, premises, documents and records audited and/or inspected by auditors and/or investigators appointed by the Fund;

(g) Maintain all accounts, documents and records relating to an IFAD-financed and/or IFAD-managed operation or activity for an adequate period of time, as specified in the relevant financing agreement; and

(h) Maintain strict confidentiality regarding any and all information received as a consequence of their participation in an IFAD investigation or sanctioning process.

12. Where the Fund finds that prohibited practices have occurred, recipients will: (a) Take appropriate corrective measures in coordination with the Fund; and (b) Give full effect to any temporary suspension or sanction imposed or recognized by the Fund, including by not selecting a bidder, not entering into a contract or suspending or terminating a contractual relationship.

13. Prior to the implementation of an IFAD-financed and/or IFAD-managed operation or activity, government recipients will inform the Fund of the arrangements that they have made for receiving and taking action in response to allegations of fraud and corruption relating to the IFAD-financed and/or IFAD-managed operation or activity, including by designating an independent and competent local authority to be responsible for receiving, reviewing and investigating such allegations.

14. When participating in an IFAD-financed and/or IFAD-managed operation or activity, government recipients will, in consultation with the Fund, take timely and appropriate action to launch a local investigation into allegations and/or other indications of fraud and corruption relating to the IFAD-financed and/or IFAD- managed operation or activity; inform the Fund of the actions taken in any such investigation at such intervals as may be agreed upon by the recipient and the Fund on a case-by-case basis; and, upon the completion of such investigation, promptly share the findings and results thereof, including the supporting evidence, with the Fund. Government recipients will work with the Fund to coordinate any actions other than investigations that they may wish to undertake in response to an alleged or otherwise indicated prohibited practice.

15. Government recipients are encouraged to have in place, in accordance with their laws and regulations, effective whistle-blower protection measures and confidential reporting

channels in order to appropriately receive and address allegations of fraud and corruption relating to IFAD-financed and/or IFAD-managed operations and activities.

E. Process

(i) Reporting

16. A designated confidential and secure e-mail address for the receipt of allegations of prohibited practices is available on the Fund's website.

17. In the event of uncertainty as to whether or not an act or omission constitutes a prohibited practice, the designated confidential and secure e-mail address may be used to seek guidance.

18. The Fund treats all reported allegations with strict confidentiality. This means that the Fund does not normally reveal the identity of a reporting party to anybody outside of the investigative, sanctioning or disciplinary process without the consent of the reporting party.

19. The Fund endeavours to provide protection from retaliation to any individuals or entities that have helped prevent or have reported to the Fund, in good faith, allegations or other indications of prohibited practices. IFAD staff and non-staff personnel are protected from retaliation under the Fund's Whistle-blower Protection Procedures.

(ii) Investigations

20. Where the Fund has reason to believe that prohibited practices may have occurred, the Fund may decide to review and investigate the matter, irrespective of any investigative actions launched or planned by the recipient.

21. The purpose of an investigation conducted by the Fund is to determine whether an individual or entity has engaged in one or more prohibited practices in connection with an IFAD-financed and/or IFAD-managed operation or activity.

22. Reviews and investigations conducted by the Fund are, inter alia:

    (a) Strictly confidential, meaning that the Fund does not disclose to anyone outside of the investigative, sanctioning or disciplinary process any evidence or information relating to the review or investigation, including the outcome of a review or investigation, unless such disclosure is allowed under the Fund's legal framework;

    (b) Independent, meaning that no authority is allowed to interfere with an ongoing review or investigation or to otherwise intervene in, influence or stop such a review or investigation; and

    (c) Administrative, as opposed to criminal, in nature, meaning that reviews and investigations conducted by the Fund are governed by the Fund's rules and procedures, not by local laws.

23. The office within the Fund that is mandated to conduct reviews and investigations into alleged or otherwise indicated prohibited practices is the Office of Audit and Oversight (AUO). Without prejudice to paragraphs 9(d) and 11(f), AUO may agree not to disclose to anybody outside of AUO any evidence or information that it has obtained on the condition that such evidence or information may be used solely for the purpose of

generating new evidence or information, unless the provider of the evidence or information consents.

F. Sanctions and related measures

(i) Temporary suspensions

24. During the course of an IFAD review or investigation, or pending the conclusion of a sanctioning process, the Fund may decide, at any time, to temporarily suspend payments to IFAD non-staff personnel, non-government recipients, vendors or third parties or to temporarily suspend their eligibility to participate in IFAD- financed and/or IFAD-managed operations and activities for an initial period of six (6) months, subject to a possible extension of that suspension for an additional six (6) months.

25. IFAD staff may be temporarily suspended from their duties in accordance with the applicable human resources framework.

(ii) Sanctions

26. If the Fund determines that IFAD non-staff personnel, non-government recipients, vendors or third parties have engaged in prohibited practices, the Fund may impose administrative sanctions on such individuals or entities.

27. Sanctions are imposed on the basis of: (i) the findings and evidence presented by AUO, including mitigating and exculpatory evidence; and (ii) any evidence or arguments submitted by the subject of the investigation in response to the findings presented by AUO.

28. The Fund may apply any of the following sanctions or a combination thereof:

    (a) Debarment, which is defined as declaring an individual or entity ineligible, either indefinitely or for a stated period of time, to: (i) be awarded any IFAD- financed contract; (ii) benefit, financially or otherwise, from any IFAD- financed contract, including by being engaged as a subcontractor; and (iii) otherwise participate in the preparation or implementation of any IFAD- financed and/or IFAD-managed operation or activity;

    (b) Debarment with conditional release, which is defined as a debarment that is terminated upon compliance with conditions set forth in the sanction decision;

    (c) Conditional non-debarment, which is defined as requiring an individual or entity to comply with certain remedial, preventive or other measures as a condition for non-debarment on the understanding that a failure to comply with such measures within a prescribed period of time will result in an automatic debarment under the terms provided for in the sanction decision;

    (d) Restitution, which is defined as a payment to another party or the Fund (with respect to the Fund's resources) of an amount equivalent to the amount of the diverted funds or the economic benefit obtained as a result of having engaged in a prohibited practice; and

(e) Letter of reprimand, which is defined as a formal letter of censure for the actions of an individual or entity which informs that individual or entity that any future violation will lead to more severe sanctions.

29. The Fund may extend the application of a sanction to any affiliate of a sanctioned party even if the affiliate has not been directly involved in the prohibited practice. An affiliate is defined as any individual or entity that is: (i) directly or indirectly controlled by the sanctioned party; (ii) under common ownership or control with the sanctioned party; or (iii) acting as an officer, employee or agent of the sanctioned party, including owners of the sanctioned party and/or those who exercise control over the sanctioned party.

30. For the purposes of IFAD-financed and/or IFAD-managed operations and activities, the Fund may consider as debarred individuals and entities that have been debarred by another IFI where: (i) that IFI is a signatory to the Agreement for Mutual Enforcement of Debarment Decisions; and (ii) such debarment meets the requirements for mutual recognition under the Agreement for Mutual Enforcement of Debarment Decisions.[8]

(iii) Disciplinary measures

31. If the Fund finds that IFAD staff have engaged in prohibited practices, the Fund may apply disciplinary measures and may require restitution or other compensation in accordance with the applicable human resources framework.

G. Referrals and information-sharing

32. The Fund may, at any time, refer information or evidence relating to an ongoing or completed investigative, sanctioning or disciplinary process to the local authorities of a Member State. In determining whether such a referral is appropriate, the Fund takes into consideration the interests of the Fund, the affected Member States, the individuals or entities under investigation and any other persons, such as witnesses, who are involved in the case.

33. If the Fund obtains information or evidence indicating potential wrongdoing in connection with the operations and/or activities of another multilateral organization, the Fund may make such information or evidence available to the other organization for the purposes of its own investigative, sanctioning or disciplinary processes.

34. In order to facilitate and regulate the confidential exchange of information and evidence with local authorities and multilateral organizations, the Fund seeks to conclude agreements which establish the rules for such an exchange.

H. Operational responses to Prohibited Practices

(i) Rejection of an award of contract

35. The Fund may refuse to give its no-objection to the award of a contract to a third party if it determines that the third party, or any of its personnel, agents, subconsultants,

[8] The Fund may, in the future, decide to also recognize debarments imposed by entities that are not signatories to the Agreement for Mutual Enforcement of Debarment Decisions.

subcontractors, service providers, suppliers and/or their employees, engaged in a prohibited practice while competing for the contract in question.

(ii) Declaration of misprocurement and/or ineligibility of expenditures

36. The Fund may, at any time, declare a misprocurement and/or the ineligibility of any expenditures associated with a procurement process or contract if it determines that a third party or a representative of the recipient has engaged in a prohibited practice in connection with the procurement process or contract at issue and that the recipient has not taken timely and appropriate action, satisfactory to the Fund, to address such practices when they occur.

(iii) Suspension or cancellation of loan or grant

37. If the Fund determines that a recipient has not taken timely and appropriate action, satisfactory to the Fund, to address prohibited practices when they occur, the Fund may suspend or cancel, in whole or in part, the loan or grant affected by such practices.